New compact hook **M5331214**

Pneumatic hook safety
M2013029

M3007989_80030

M64040109

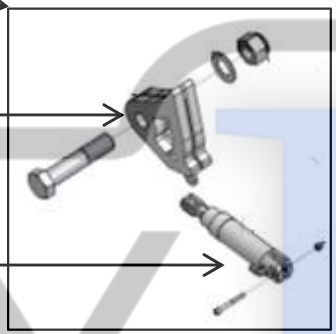

Mechanical hook safety
M2013031

M3008127_80030

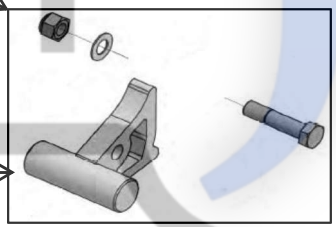

Type	Date of validity	Range
T	05/2012➔	13 to 26 T
P	05/2012➔	17 to 24 T
S	09/2013➔	17 to 21 T

Hook wear

