Model:S-HIPRO 130
Chapter 5.2 Supply unit VP assembly

9868844
HP filter

9868844 - HP filter

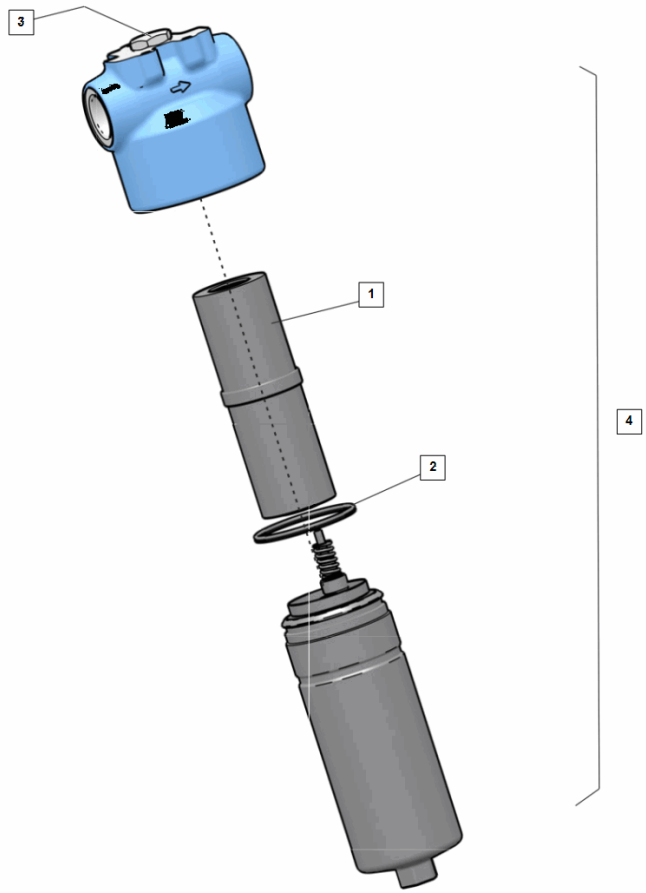

Pos	Part nr	Description	Quantity
1	9868852	FILTER CARTRIDGE	1
2	9868861	O-RING	1
3	464-6640	FILTER PLUG	1
4	9868844	FILTER,HIGH PRESSURE	1