Hose clip
see page 0600.01001-A

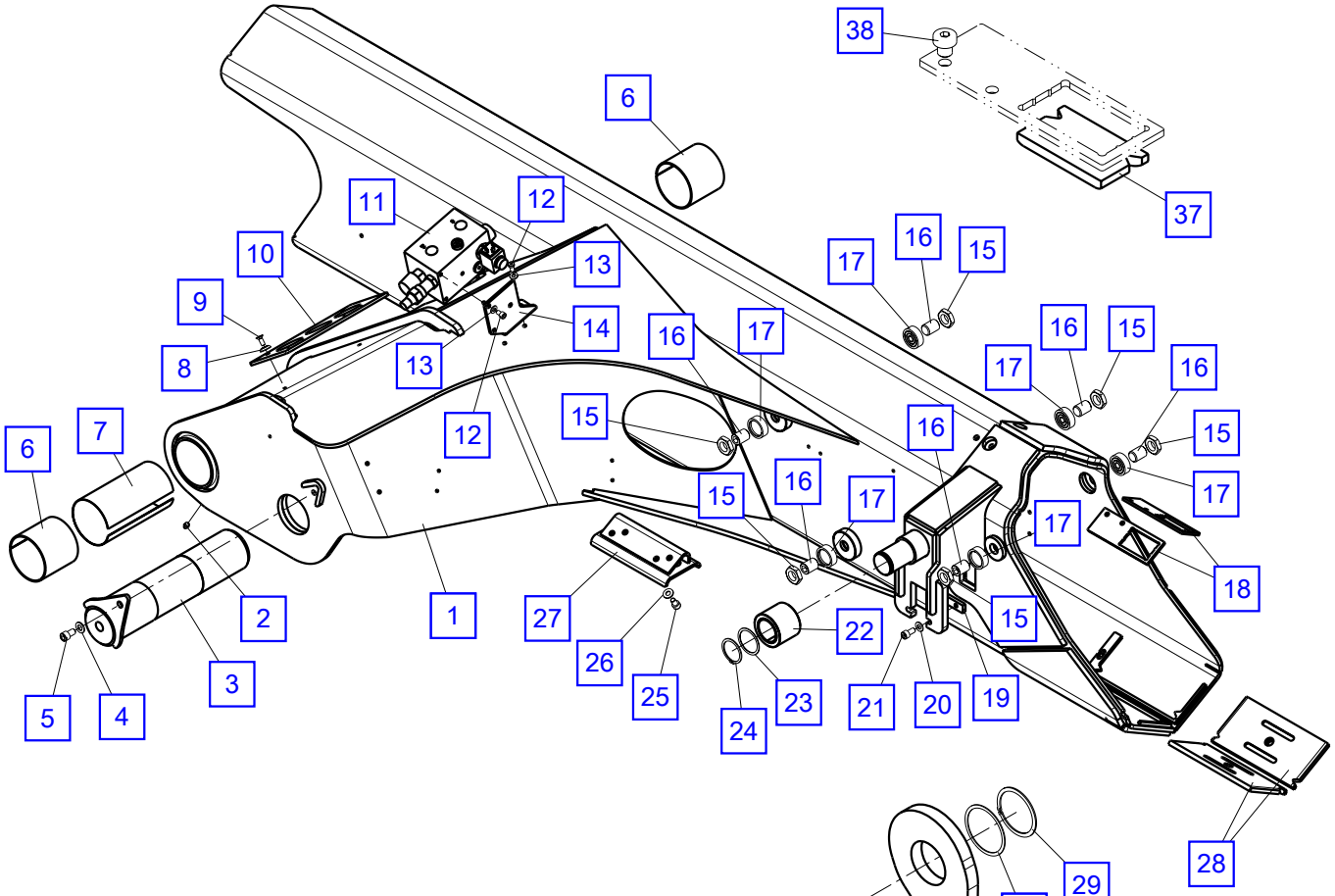

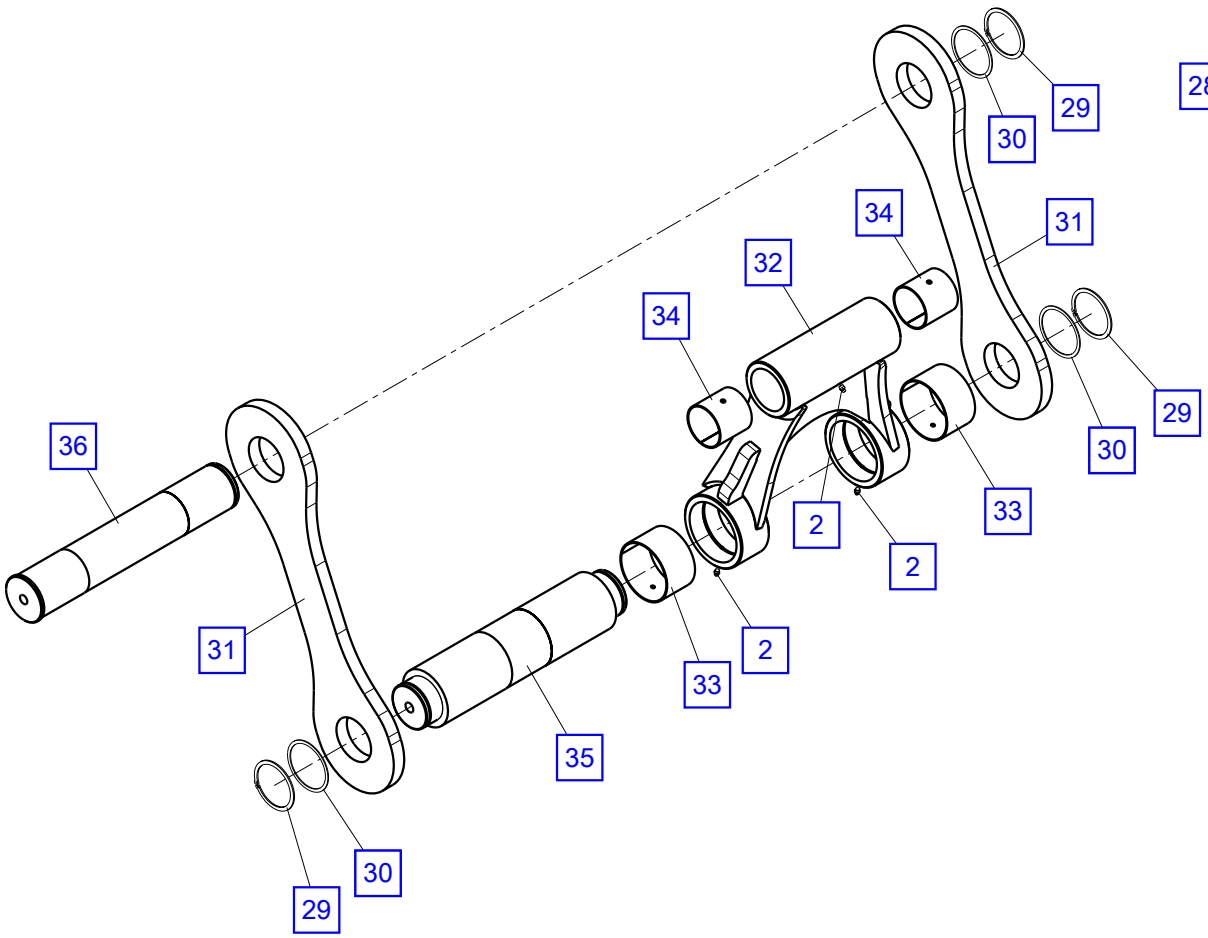

No.	Spare part	Qty.	Description	Dimension
1	S507K01SA	1	Outer boom	
1	S507K02SA	1	Outer boom Rope winch - outer boom	
2	EA 005	4	Grease nipple	M 10x1 DIN71412
3	HI3347	1	Pin	
4	EK 207	1	Washer	D 12 DIN 125
5	ES 040	1	Screw	M 12x20 DIN 912
6	ELG 022	2	Bearing bush	D 100x105x95
7	HBD 463	1	Distance washer	
8	EK 568	2	Washer	D 8
9	ES 109	2	Screw	M 8x20 DIN 7991
10	HT10945	1	Plate	
11	EV2491	1	Load holding valve without magnet	
	EV4637	1	Magnet valve	
	EV4709	1	Magnet	12V
	EV4710	1	Magnet	26V
	TD 977	1	Seal kit	
12	ES 051	5	Screw	M 8x16 DIN 7984
13	EK 003	5	Washer	D 8 DIN 125
14	HA11676	1	Bearer	
15	EM 192	6	Nut	M 24x1.5 DIN936
16	HIG 927	6	Pin	
17	EZ2848	6	Guide block	D 45x15
18	HT9378	2	Bearer	
19	HTR1650	1	Holding plate	
20	EK 007	2	Washer	D 10 DIN 125
21	ES 587	2	Screw	M 10x25 DIN7984
22	HXE3166	1	Tread roller	
23	HBS1175	1	Distance washer	1,5 mm
24	EQ 086	1	Circlip	D 50 DIN 471
25	ES 024	2	Screw	M 10x16 DIN 912
26	EK 202	2	Washer	D 10,5 DIN 134
27	HXE3217	1	Armrest Fly-Jib	
28	HF1383+00016	2	Guide block	16 mm
28	HF1383+00017	2	Guide block	17 mm
28	HF1383A+00010	2	Guide block	10 mm
28	HF1383A+00011	2	Guide block	11 mm
28	HF1383A+00012	2	Guide block	12 mm
28	HF1383A+00013	2	Guide block	13 mm
28	HF1383A+00014	2	Guide block	14 mm
28	HF1383A+00015	2	Guide block	15 mm
29	EQ 028	3	Circlip	D 100 DIN 471
30	HBS 960	3	Distance washer	2,0 mm
30	HBS 961	3	Distance washer	1,5 mm
31	S509L0401	2	Lever	
32	S509L03-A	1	Lever (+33,34)	
33	ELG 315	2	Bearing bush	
34	ELG 055	2	Bearing bush	D 90x95x90
35	HI3348	1	Pin	
36	HI3349	1	Pin	

No.	Spare part	Qty.	Description	Dimension
37	HF 834A	2	Guide block	8 mm
37	HF 835A	2	Guide block	9 mm
37	HF 836A	2	Guide block	10 mm
37	HF 837A	2	Guide block	11 mm
37	HF 838A	2	Guide block	12 mm
37	HF1405	2	Guide block	7 mm
37	HF1406	2	Guide block	6 mm
38	ES 243	4	Screw	M 10x10 DIN7984
38	ES1179	4	Screw	M 10x12 DIN 7984
38	ES1430	4	Screw	M 10x14 DIN 7984