Model:X-HIPRO 122

Chapter 2.2 Stabiliser legs and fittings

1866869

ong stabiliser, mechanically tilting (2pcs), fixed plate

1866869 - Mounting long stabiliser, mechanically tilting (2pcs), fixed plate

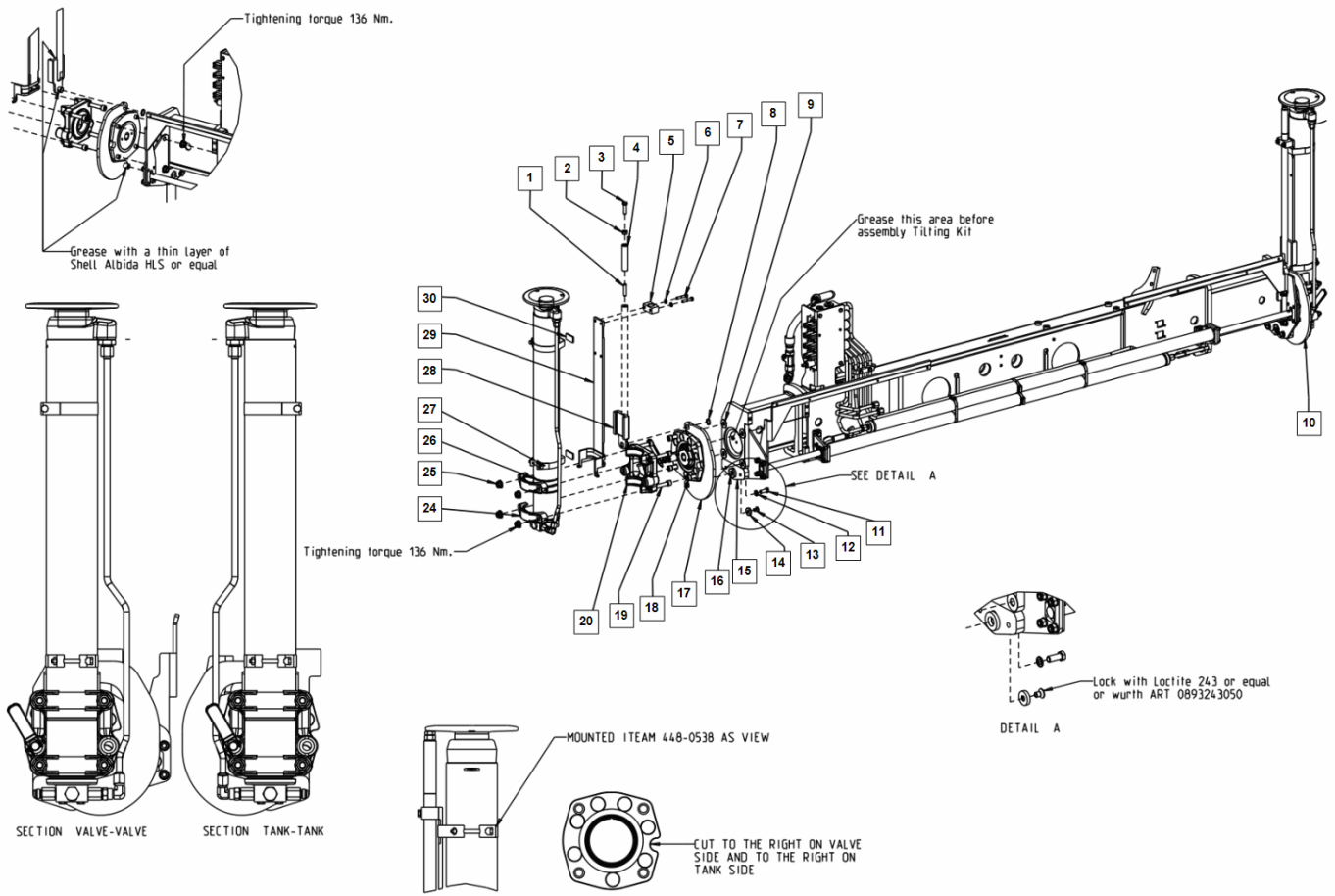

Pos	Part nr	Description	Quantity
1	4939549	STUD BOLT	2
2	9908480	HEXAGON NUT	2
3	9900535	HEXAGON HEAD SCREW	2
4	4939492	ROD EXTENSION	2
5	3762378	GUIDE	2
6	9904131	SPRING WASHER	4
7	9924086	HEXAGON HEAD SCREW	4
8	9905898	RETAINING RING	2
9	3655857	WASHER	8
10	4933508	PLATE	1
11	9924353	HEXAGON HEAD SCREW	4
12	9908498	SPRING WASHER	4
13	9812989	SCREW	2
14	4936116	WASHER	2
15	1866621	PLATE	2
16	1890441	RING	2
17	4933397	PLATE	1
18	9922903	SCREW	8
19	9922954	HEXAGON SOCKET HEAD CAP S(	8
20	597-4181	TILTING KIT	2
20	3734501	TILTING,KIT,STABILIZER CYLINDE	2
24	3500691	CLAMP	4
25	9966986	FLANGE NUT	16
26	3500721	LOCK RING	4
27	4480538	HOSE CLAMP	4
28	3734587	GUIDE	2
29	3773434	SLIDE RAIL	2
30	3475727	GUARD	4