LIFETIME EXCELLENCE

PALFINGER

Spare Parts Catalogue
PK 7.001K SLD 3
(S104-EK-B)

Valid for serial number 100679684

First Edition: 02/2016
Edition: 10/2025 EN

PALFINGER AG
Lamprechtshausener Bundesstraße 8
5101 Bergheim / Austria
www.palfinger.com

Preface

This catalogue of spare parts is based on latest stages of product design and development.

If you have maintained and serviced the technically matured equipment purchased from us in accordance with our instructions, there will scarcely be any need to consult this spares catalogue.

Should, in spite of this, the occasion arise to order spares, we would kindly ask you to state precise details as given in the catalouge, (please refer to "INFORMATION ON THE ORDERING OF SPARE PARTS") so as to avoid confusion.

We reserve the right to make design modifications.

Information on the ordering of spare parts

To supply you with the correct parts in the shortest possible time it is necessary to inform us about following details:
– Loader type, code and serial number (look identification plate)
– Spare parts number
– Required quantity of spare parts

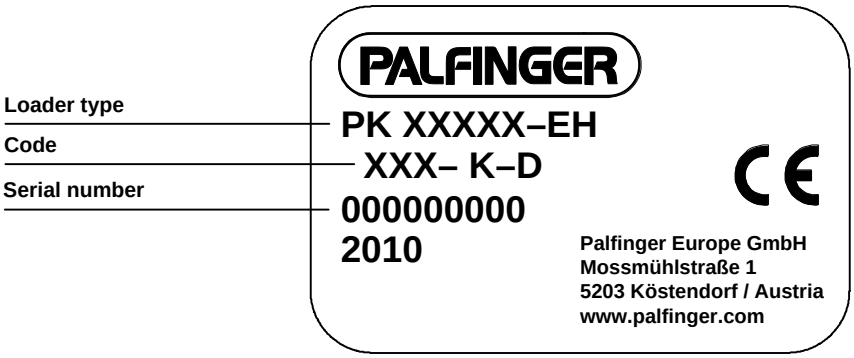

(-->123456789)	Valid to crane number
(123456789-->)	Valid from crane number
(1-16)	consists out of position 1-16
(+20)	with position 20
Page-A	Control valve side
Page-B	Counter control side

ABST	Support	R	without extension box
		R0	One side extension box
		R1	Both side extension box
		R2	Both side extension box - extended
		R3	Extension box telescopic
		R4	Both side extension box - extended
		R.X	Both side extension box - hydraulical
		SR.	Support controllable from top seat
DPS+	Dual Power System Plus		
FERN	Remote control	FFST	Radio remote control
FERT	Type - remote control	PALF20	PALFINGER-PALCOM
		P2	PALFINGER-SCANRECO
		BMS2	HETRONIC
		P3	with display
GGSR	Control (reverse acting)		
GRA	Type - crane Base	LKW	Mounting LKW
		SAT	Semi-trailer installation
		EGG	Integrated base
HEC	Rear-stabilizer	HSTZY	Tiltable stabilizer
HEM	Rear module	HEM900	Rear module +900
HKONS	Top seat FFST	HK001	Standard seat
		HK002	Tiltable seat
		HK003	Seat with heater
		HK004	Folding seat with heater
HOST	Top seat - control	KL0	Linear lever control
		KK1	Cross lever control
HPLS	High Power Lifting System	EHPLS	High Power Lifting System
		SHPLS	Super High Power Lifting System
HSITZ	Top seat - standard	HS005	Tiltable seat
		HS012	Standard seat
HYA,PJHY	Hydraulic extensions	()	Configuration with one hydraulic extension boom
		A	Crane with 2 hydraulic extension booms
		B	Crane with 3 hydraulic extension booms
		C	Crane with 4 hydraulic extension booms
		D	Crane with 5 hydraulic extension booms
		E	Crane with 6 hydraulic extension booms
		F	Crane with 7 hydraulic extension booms
		G	Crane with 8 hydraulic extension booms
		H	Crane with 9 hydraulic extension booms
IKONS	Standing platform FFST	IK002	without IS001, with IG001
		IK004	with IS001,IG001
		IK006	with IS002,IG001
IG	Railing	IG001	3 port
		IG002	2 port
IS	Limitation of rotation (I)	IS001	Limitation of rotation over (I)
		IS002	Limitation of rotation, main boom over (I)
		IS003	Limitation of rotation over (FL)
ISC	Integrated Stability Control	ISC01	Support control +SHB
		HPSC	High Performance Stability Control
LHA	Crane hook	LHA03	25t with sleeve bearing
		LHA04	8t with sleeve bearing
		LHA06	15t with sleeve bearing
		LHA08	5,4t with sleeve bearing
		LHA09	11t with roller bearing
		LHA12	8t with roller bearing

Signs and symbols

LHV	Load holding valve	LHV...	see page 0.22
NOTAB	Emergency lowering device	NOT01	(NOTAB) Lifting cylinder
O	Overload protection	OSK	with lock cylinder
OELKU	Oil cooler	ÖLK01	Oil cooler 8.5kW mounted
		ÖLK02	Oil cooler 10.5kW, loose
		ÖLK03	Oil cooler 8.5kW, loose
		ÖLK04	Oil cooler 20kW mounted
		ÖLK05	Oil cooler 20kW, loose
		ÖLK07	Oil cooler 10.5kW mounted
PAL	Paltronic	PT050	Paltronic 50
		PT150	Paltronic 150
PJ	Fly-Jib		
PJHY	Hydraulic extensions	see (HYA)	
PJKSL	Hose-equipment (PJ)	J02	1 Auxiliary equipment
		J04	Auxiliary equipments2
PJV	Extension	see (V)	
PUMPE	Type - pump	PU002	Fixed displacement pump
		PU003	Variable displacement pump
RODRU	Rotator (...bar)		
S	Rope winch	SHE	with limiting switch - main boom
		SK	without limiting switch - outer boom
		SKE	with limiting switch - outer boom
		SHEK	Power link rope winch (hydraulic tiltable at main boom)
SCH	Slew limitation	GR___	Limit of rotation ___ degree
SHB	Slew angle dependent capacity limitation	SHB01	with one pressure range
		SHB07	with 2 pressure ranges + jumper
SKUPP	Quick-coupling	MULTI1	Quick-coupling, crane
	Multifaster	MULTI2	Quick-coupling,(PJ)
		MULTI3	Quick-coupling, crane+(PJ)
SL	Hose-equipment	2	1 Auxiliary equipment - hose tray
		4	2 Auxiliary equipment - hose tray
		T2	1 Auxiliary equipment - hose drum
		T4	2 Auxiliary equipment - hose drum
		T2i	1 Auxiliary equipment - hose drum (inside)
		T4i	2 Auxiliary equipment - hose drum (inside)
SLVO	Preparation (SL)	VSL2	Preparation (SL) 1 auxiliary equipment
		VSL4	Preparation (SL) 2 auxiliary equipment
SONSL	Control valve section (SL)	SSZD	Brick grab Germany
		SSZT	Brick grab + deadman push button
		SCSTD	Type Scandinavian
SOSTZ	Stabilizer ram	STÜ01	Stabilizer ram -150 mm
		STÜ02	Stabilizer ram +100 mm
		STÜ03	Stabilizer ram -100 mm
STEIL	Boom angle monitoring system	STEIL1	Boom angle monitoring system
		STEIL2	Monitoring the steep position (PJ)
STG	Control - support	FL	Control valve - support
		FLZUS	Control valve - auxiliary support
		FFST4	remote controlled (4-elements)
		FFST8	remote controlled (8-elements)
		FFST12	remote controlled (12-elements)
		FFST14	remote controlled (14-elements)
STGA	Control - crane	FL	Floor control
		I	High stand platform
		H	Top seat
		NK	Emergency control - crane column
		NK2K	Emergency control - crane column, double circulit
STRAN	Rope winch, strand	1	1 strand
		2	2 strand
		4	4 strand
STT	Stabilizer plates	STD	Standard
		___	Extension ___mm
STU	Hour meter		

STZ	Stabilizer ram	STZO	Type without support
		STZS3	Stabilizer ram - rigid
		STZY3	Stabilizer ram - slewable
		STZY	Hydraulically tiltable stabilizer cylinder
		STZS3Y	Page-A=(STZS3) B=(STZY3)
		STZYS3	Page-A=(STZY3) B=(STZS3)
SWERK	Slewing system	1GETR	1-Slewing gear
		2GETR	2-Slewing gear
SWK	Max. rope winch capacity:	1,5 - 4,5	1,5t - 4,5t
TKKR	Crane tank		
TKLO	Auxiliary tank	TL___	Oil tank___l
TOT	Dead center	TOWI	Dead center over balance
		TOQU	Dead center over transverse spar
		SE	continuous
TRANS	Transport position monitoring	TRAN1	Armrest
		TRAN2	Main boom - horizontal level
TSCH,TSTB	Control valve	DN46	DINOIL DN46
		M4-12	REXROTH M4-12
		PVG32	DANFOSS PVG32
		RS210	NORDHYDRAULIK RS210
		RS220	NORDHYDRAULIK RS220
		RSQ240	NORDHYDRAULIK RSQ240
		SDM081	WALVOIL SDM081
		VDM07	SALAMI VDM07
V,PJV	Extension	V1()	1 Extension by (HYA ())
		V1A	1 Extension by (HYA A)
		V1B	1 Extension by (HYA B)
		V1C	1 Extension by (HYA C)
		V1D	1 Extension by (HYA D)
		V1E	1 Extension by (HYA E)
		V1F	1 Extension by (HYA F)
		V1G	1 Extension by (HYA G)
		V1H	1 Extension by (HYA H)
		V2()	2 Extensions by (HYA ())
		V2A	2 Extensions by (HYA A)
		V2B	2 Extensions by (HYA B)
		V2C	2 Extensions by (HYA C)
		V2D	2 Extensions by (HYA D)
		V2E	2 Extensions by (HYA E)
		V2F	2 Extensions by (HYA F)
		V2G	2 Extensions by (HYA G)
		V2H	2 Extensions by (HYA H)
		V3()	3 Extensions by (HYA ())
		V3A	3 Extensions by (HYA A)
		V3B	3 Extensions by (HYA B)
		V3C	3 Extensions by (HYA C)
		V3D	3 Extensions by (HYA D)
		V3E	3 Extensions by (HYA E)
		V3F	3 Extensions by (HYA F)
		V3G	3 Extensions by (HYA G)
		V3H	3 Extensions by (HYA H)
LHV	Load holding valve	LHV14	
		LHV18	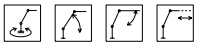
		LHV19	
		LHV28	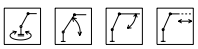 Double-acting load holding valve
		LHV34	

Table of Contents

Page	
0	PREFACE
0.02	Preface-EN
0.20	Signs and symbols
0.21	Signs and symbols
0.22	Signs and symbols
0100	CRANE BASE
0100.01000	Base R1,R2
0100.01001	Catcher
0100.02000	Attachments
0100.03100	Cover PT040 FL
0100.04000	Slewing system
0100.05000	Piping - slewing system(LHV18)
0100.06000	Piping - slewing system FL
0100.07010	Piping - control RS210 (R1,R2) (ST2,ST4)
0100.08000	Central lubrication system
0100.09000	Hoses FL
0100.10000	Extension box R1
0100.10210	Hose tray
0100.11000	Extension - box piping R1,R2
0100.12000A	Oil tank, cpl. TKKR
0200	CRANE COLUMN
0200.01000	Crane column
0200.01001	Lifiting cylinder - details
0200.01002	Hose clip
0200.01003	Breakdown light
0200.02100	Piping - lifting cylinder PALTRONIC
0200.02501	Load holding valve UV439-330/370
0200.02600	Pressure transducer PT040
0300	MAIN BOOM
0300.01000	Main boom
0300.01001	Outer boom ram - details
0400	OUTER BOOM
0400.01100	Outer boom
0400.02000	Linkage system
0400.03000	Inclination switch
0500	BOOM EXTENSIONS
0500.01000	Extension boom 1 + piping
0500.01102	Boom extensions ram UP2223A details
0700	SAFETY DEVICES
0700.01100	Extension box control PT040 (R1,R2)
0700.02100	Transport position monitoring PT040 TRAN2,5

Page	
0800	MISCELLANEOUS
0800.01000	Miscellaneous
0800.02000	Decals
0800.03110	Decals (PK 7.001K SLD 3)
0800.04000	Service kit
1000	CONTROL SYSTEM
1010	CONTROL - SUPPORT DN46,VDM07
1010.00100	Bracket FL
1010.00111	Bracket HXE 539,HXE 560
1010.01000	Control system
1010.02000A	Control valve KSC00012A
1010.02100A	Control valve - details
1100	CONTROL - CRANE RS210
1100.00100	Valve bracket FL,I
1100.00101	Valve bracket HXE 506,HXE 553
1100.01000	Control system
1100.02010	Control valve KSC01158A
1100.03010	Inlet element
1100.04000	Slewing system
1100.05000	Main boom
1100.06010	Outer boom
1100.07000	Boom extension
1100.10010	End element
1100.10110	End element ISC
1100	STABILIZER CYLINDER
1111	STABILIZER RAM STZY3
1111.01300	Support STZY3 R1,R2
1111.01311	Stabilizer ram UP1551A
1111.02000	Check valve EV4109B
1118	STABILIZER PLATES
1118.00300	Stabilizer plates
1200	AUXILIARY EQUIPMENT
1210	MOUNTING EQUIPMENT
1210.01018	U-bolt kit UZ347 BRI-3B
1211	OIL TANK TKKR
1211.01001A	Oil tank UT084A
1211.02000	Return oil filter

Table of Contents

Page	
1214	CRANE HOOK
1214.00010	Crane hook 5.4t
8200	ELECTRICAL PARTS
0200	PALTRONIC 40
0200.00100	Terminal "A"
0200.00200	Connection box
0200.01	TERMINAL
0200.01.00201	Terminal 3
0200.02	WIRING RS210
0200.02.00100	Cable connection (FL)
0200.02.01001	Cable harness EEA15147
0200.02.01002	Cable harness EEA15151
0600	ELECTRICAL PARTS - STANDARD
0600.00001	Packing gland
0600.00002	Switch 16 mm
0600.00003	Switch 22 mm
0600.00004	Line-up terminal
0600.00005	Relay (1)
0600.00006	Relay (2)
0600.00007	Cable - Protection hose
0600.00008	Horn + Lighting
0600.00100	Connector kit
0600.00101	Connector kit
0600.00103	Plug Molex
0700	WORKING LIGHT
0700.00001	Working light

This page is intentionally left blank

Base R1,R2

No.	Spare part	Qty.	Description	Dimension
1	S104G02SC+R3020	1	Crane Base (Standard colour RAL 3020)	
2	HT6312	1	Bearing	3,0 mm
3	ER 024	1	V-Ring	D 233-260
4	HBK 109	1	Bearing ring	D0229.0 d0190.5
5	HT7778	1	Folding arrow	
6	EK 178	1	Washer	ISO7093-2-06-140HV
7	ES1658	1	Screw	M 6x12 8.8
8	HTR2726	2	Stop buffer	
9	ES 087	4	Screw	M 6x30 ISO4762 - 8.8
10	EK 190	4	Washer	D6 DIN134 - 06 - ST
11	ES 264	3	Screw	M8x16 ISO4762 - 8.8
12	EK 003	3	Washer	D8.4 ISO7089
13	EA4922	1	High pressure filter	
	TD1553	1	Seal kit	
	EA4923	1	Filter element	
14	HT6313	1	Bearing	3,0 mm
15	EQ 147	1	Circlip	D 130 DIN 471

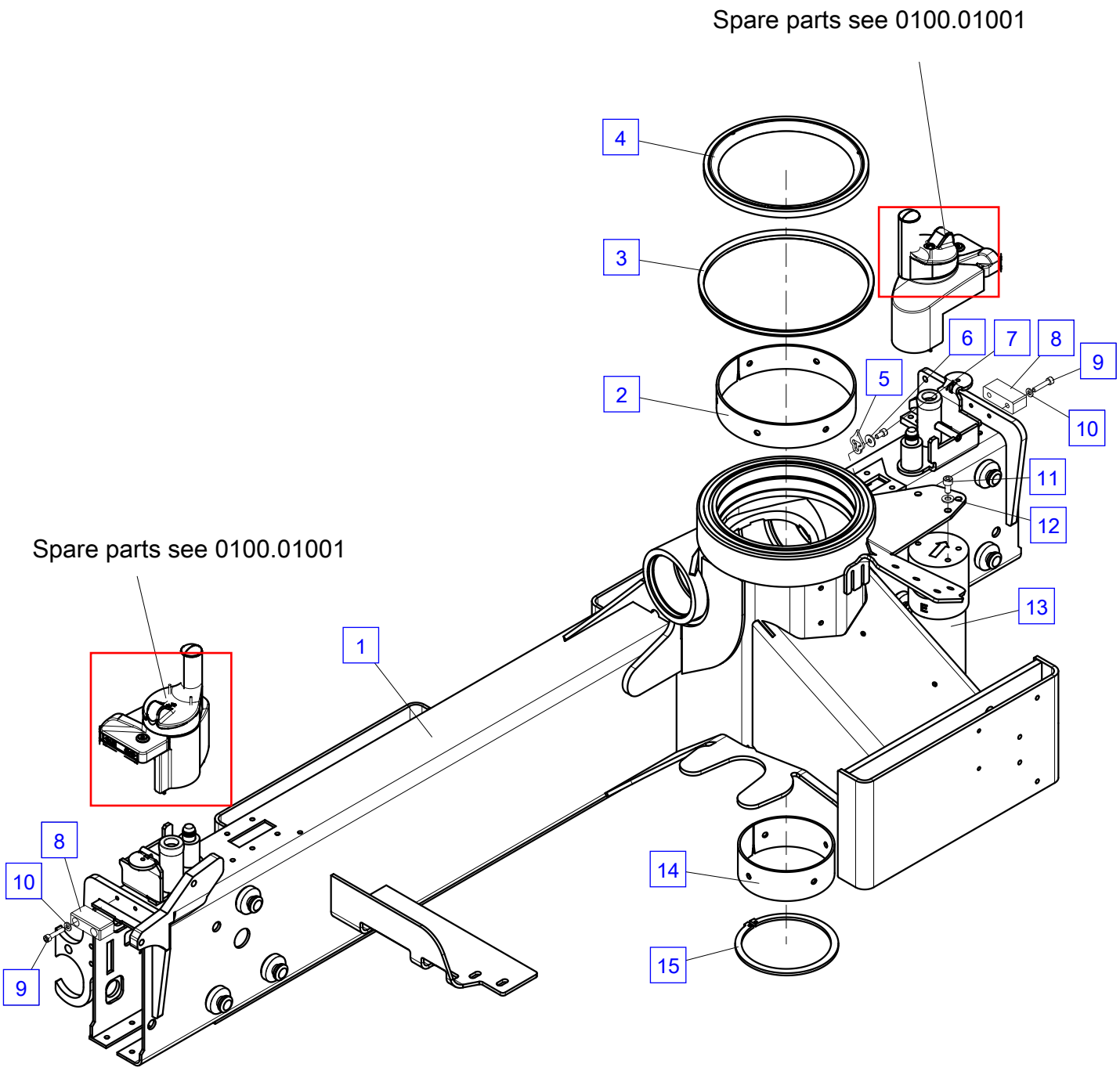
Spare parts see 0100.01001
4
3
2
6
7
8
9
5
10
11
12
13
Spare parts see 0100.01001
1
8
10
9
14
15

Catcher

No.	Spare part	Qty.	Description	Dimension
1	ES 291	1	Screw	M 5x35 ISO4762- 8.8
2	EK 153	1	Washer	D5 DIN134 ST
3	EK1072	1	Handle	
4	ES1329	1	Screw	M6x20 ISO14581- 8.8
5	EK 567	1	Washer	D6 ISO7093
6	EK1071	1	Cover	
7	EK1073	1	Cover	
8	EF 199	1	Spring	
9	EQ 352	2	Circlip	D 18 DIN 471
10	EK1033	1	Bracket	
11	HI7209	1	Pin	
12	HT6976	1	Safety plate	
13	EF 168	1	Spring	
14	EA1240	1	Grease nipple	M 6x1 H3 71412
15	EF 081	1	Pressure spring	D 20,5x1,5x115
16	HI3064	1	Pin	
17	EEA4020	1	Sensor Closer	M 12x1 - M 12x1

R1, R2

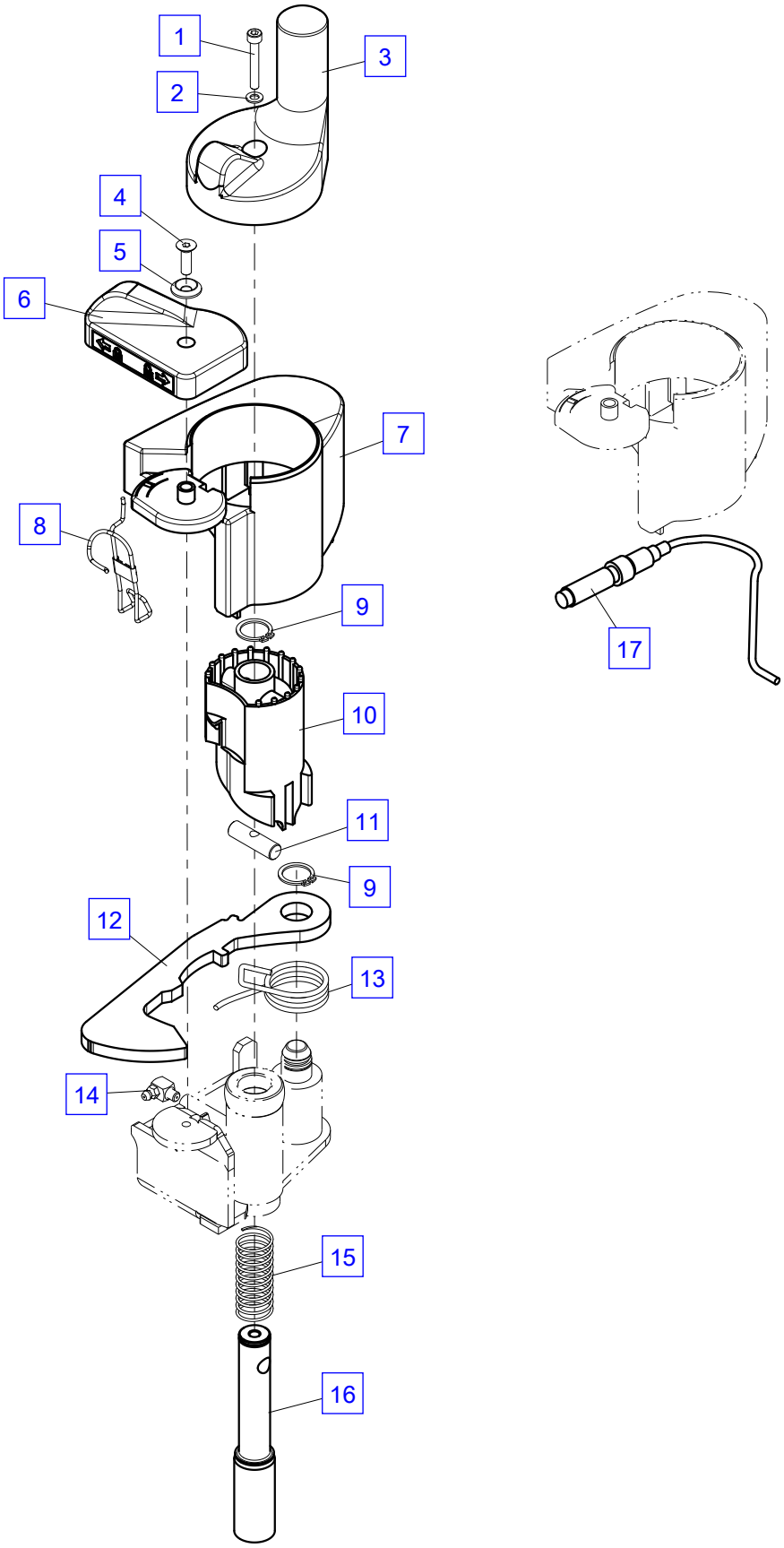

Attachments

No.	Spare part	Qty.	Description	Dimension
1	EM 026	1	Nut	M8 DIN985
2	HXL 020	1	Hose ring	D=100mm
3	EK 003	1	Washer	D8.4 ISO7089
4	ES 384	1	Screw	M8x30 ISO4762- 8.8

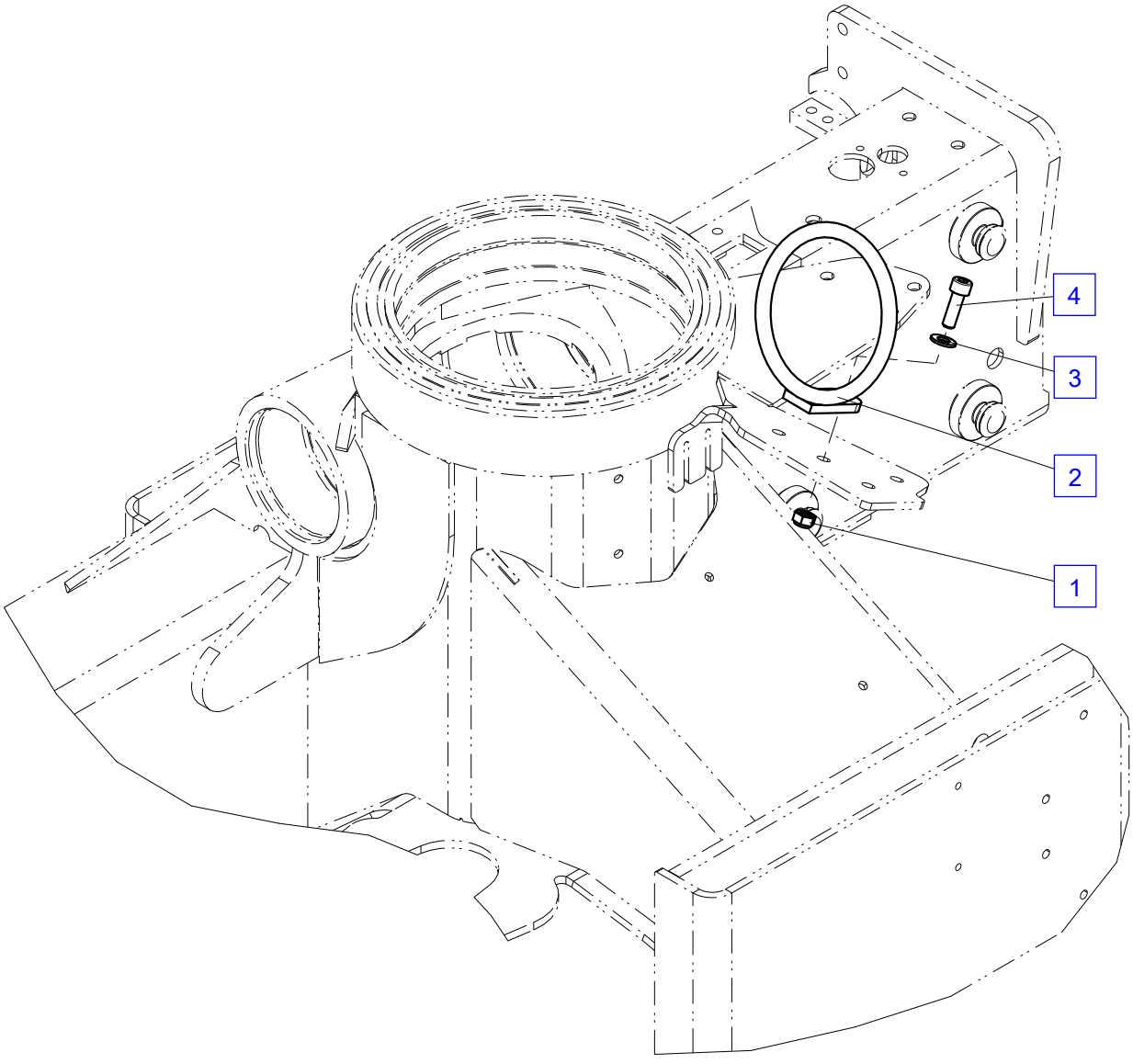
4
3
2
1

Cover PT040 FL

No.	Spare part	Qty.	Description	Dimension
1	HXE6303	1	Bracket	
2	ES2496	4	Screw	M 6x16 ISO7380-10.9
3	ES 175	4	Screw	M6x16 ISO4762 - 8.8
4	EK 043	4	Washer	D6.4 DIN134
5	HA16677	1	Stirrup	

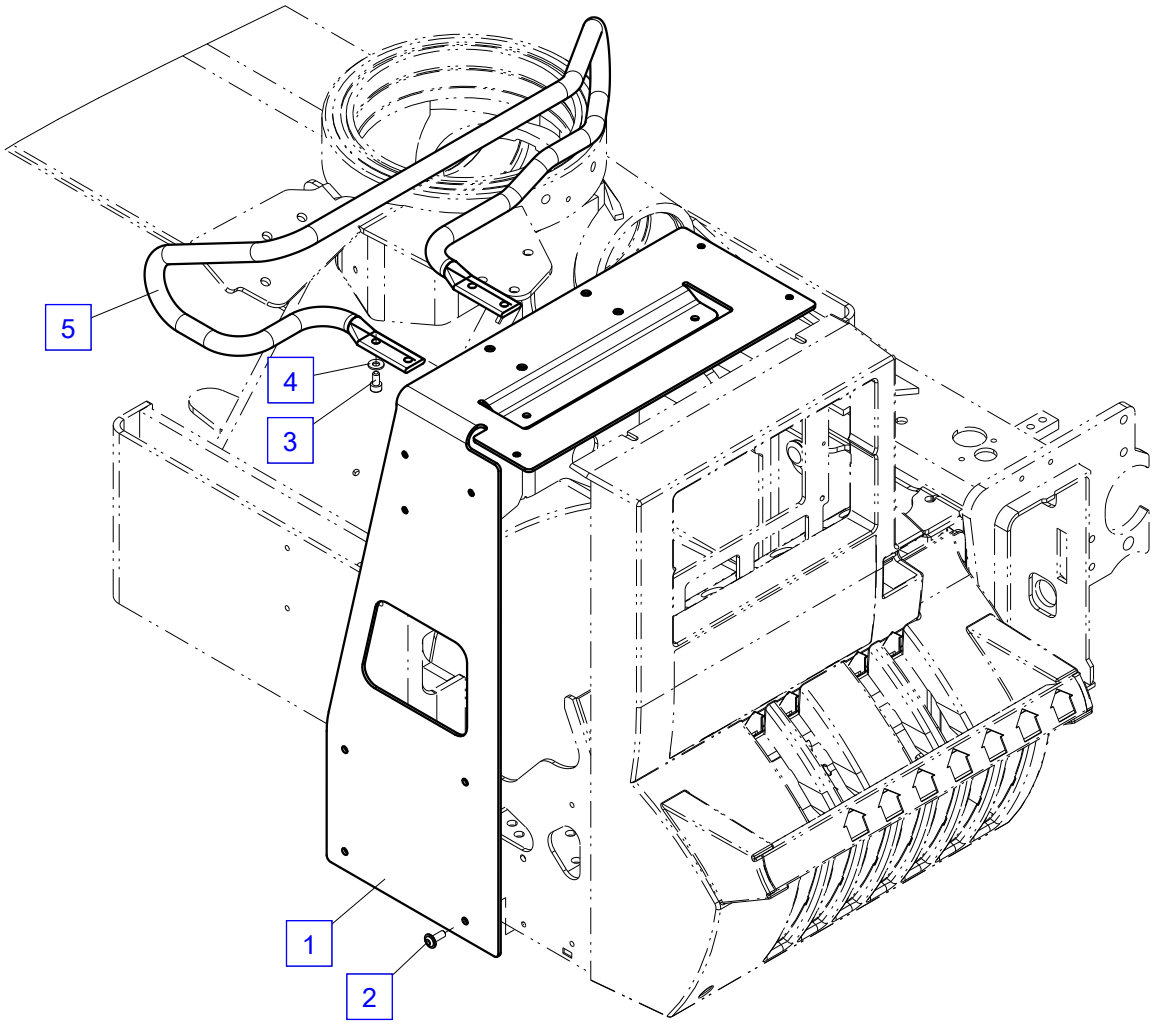

Bracket
see additional chapter 1000

Slewing system

No.	Spare part	Qty.	Description	Dimension
1	HY1410AK	2	Cylinder tube	
1	EO1264	2	O-ring	D 88x3
2	EQ 086	2	Circlip	D50 DIN471
3	ED1235	2	Guide ring	80x75x14,8
4	HK 667	2	Piston	D080xL019.2
5	ED1234	2	Seal ring	80x60x12,5
6	ES1515	2	Screw	M10x1x25 DIN912
7	EK1108	2	Washer	D 10,5 DIN 140
8	HK 669	2	Slew limitation	l=101 mm
9	EO 035	2	O-ring	D 24,2x3
10	HZS 091	1	Rack	
11	HIG 228	1	Grease tube	D016.0xL0055.0
12	EO 027	1	O-ring	D 11,3x2,4
13	EO 130	1	O-ring	D 11x3,5
14	HF 913	1	Guide block	
15	EM 026	2	Nut	M8 DIN985
16	EV8883-210	1	Load holding valve	210 bar
17	HA9481	1	Bearer	
18	ES 432	2	Screw	M8x50 ISO4762 - 8.8
19	ES 264	2	Screw	M8x16 ISO4762 - 8.8
20	EK 003	2	Washer	D8.4 ISO7089

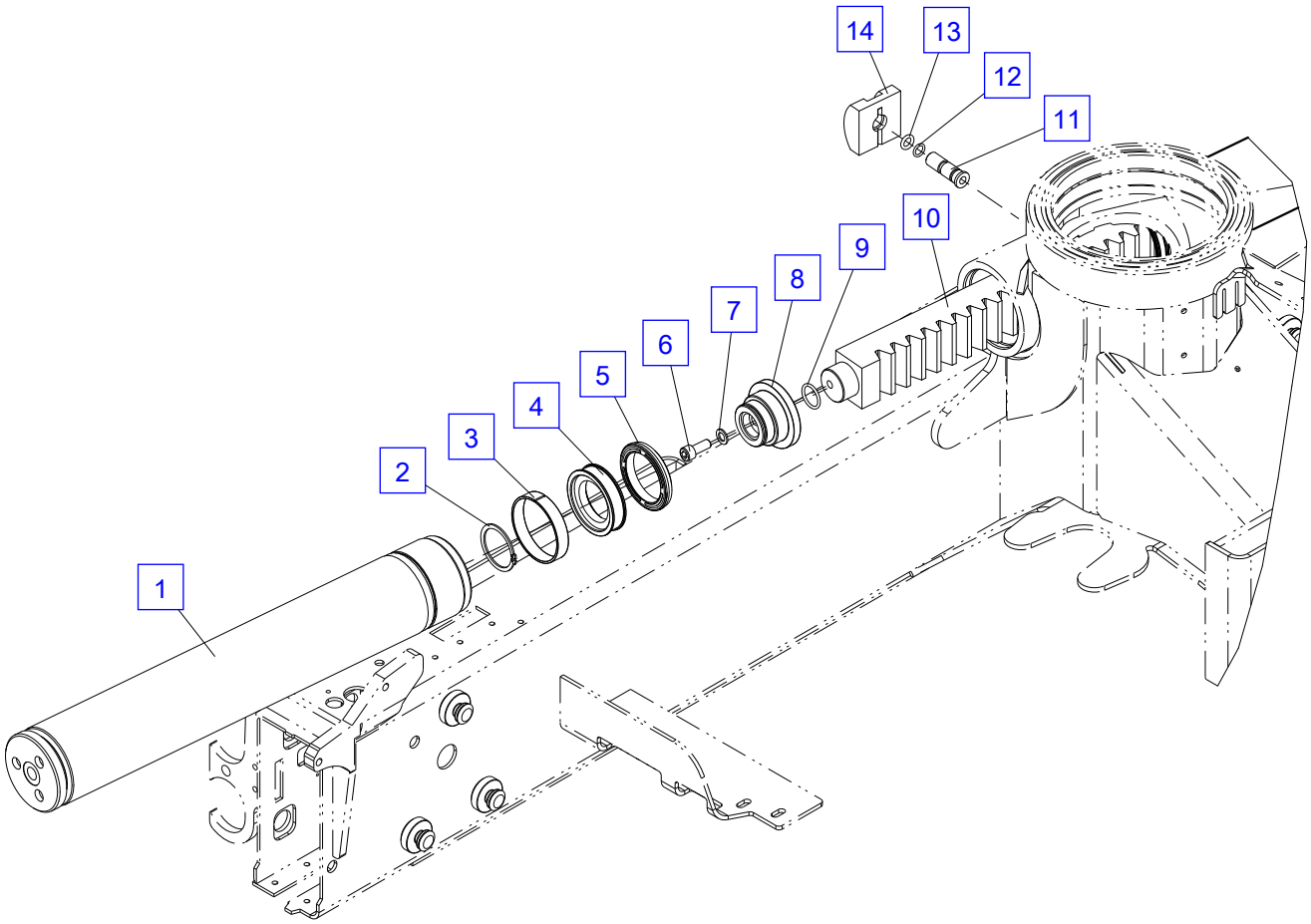
14
13
12
11
10
9
8
7
6
5
4
3
2
1

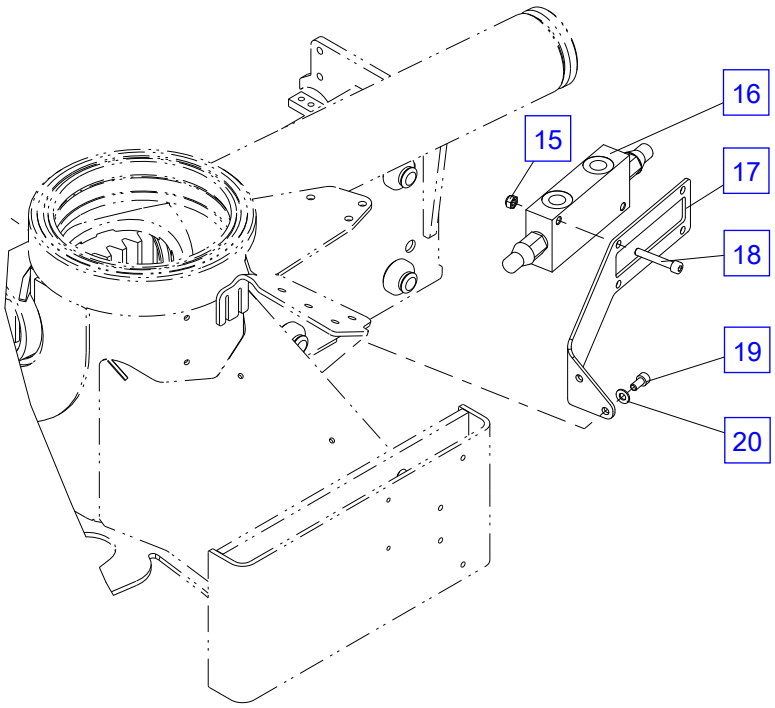
16
15
17
18
19
20

Piping - slewing system(LHV18)

No.	Spare part	Qty.	Description	Dimension
1	EA 039	2	Fitting	GE 12S R3/8"-ED
2	HLR 1710	1	Pipe	D 12
3	EA1875	2	Adaptor	WEE 12S R1/2"
4	EA 183	2	Fitting	GE 12S R1/2"-ED
5	HLR 1498	1	Pipe	D 12

Piping - slewing system(LHV18)

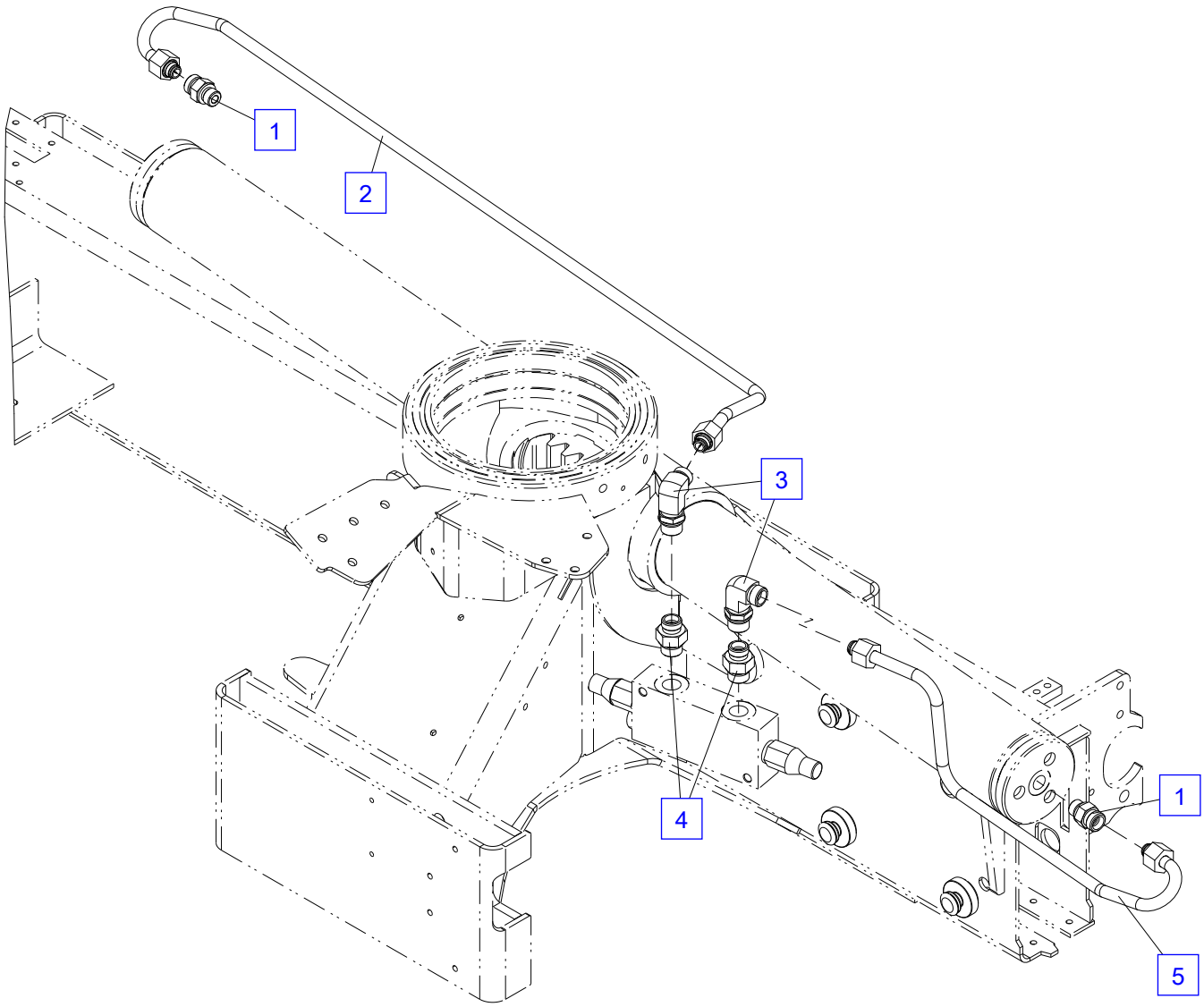

Piping - slewing system FL

No.	Spare part	Qty.	Description	Dimension
1	EH2304	1	Hose	NW 8x550
2	EA 183	1	Fitting	GE 12S R1/2"-ED

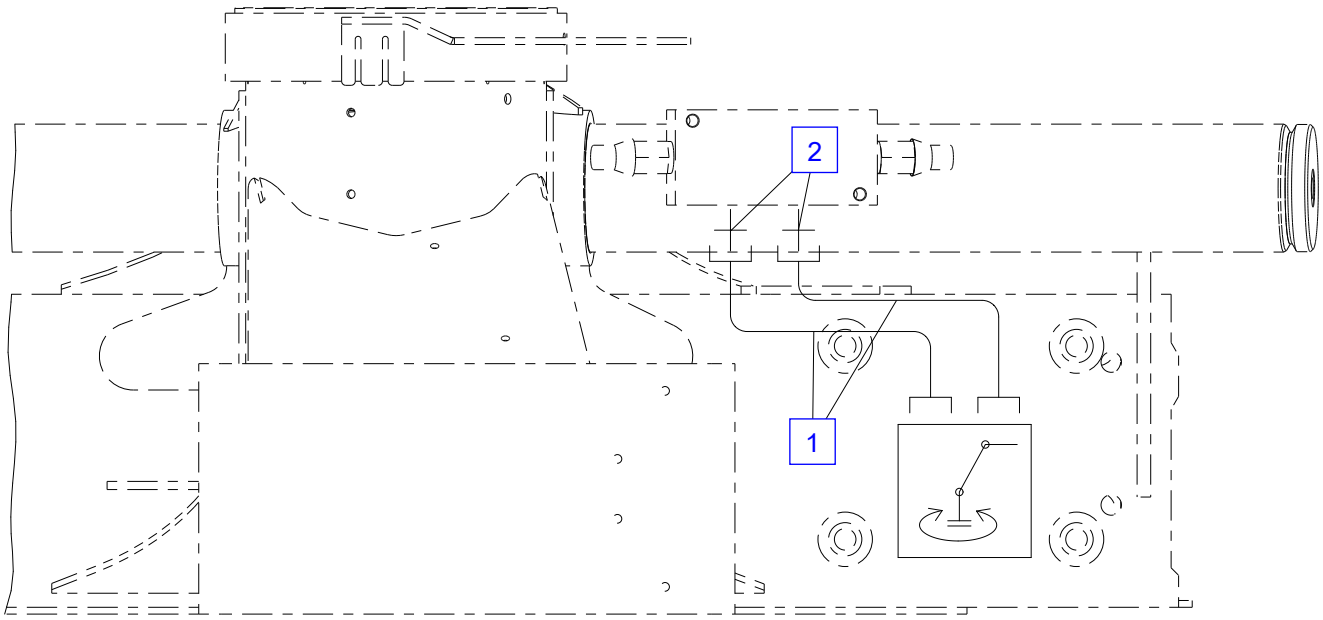
2
1

Piping - control RS210 (R1,R2) (ST2,ST4)

No.	Spare part	Qty.	Description	Dimension
1	EA 045	1	Nut	M 16-S - M 24x1,5
2	EA 343	1	Blind plug	BUZ 16 S
3	EA 033	2	Fitting	GE 16 SR 3/4"ED
4	EH1169	1	Hose	NW 12x500
5	HLR14123	1	Pipe	D 18
6	EA 019	1	Angle fitting	EW 16S
7	HLR10463	1	Pipe Control valve (4-sections)	D 16
8	EA 237	1	Angle fitting	EW 18 L
9	HLR10462	1	Pipe Control valve (4-sections)	D 18
10	EH3446	1	Hose for oil tank	NW 16x900

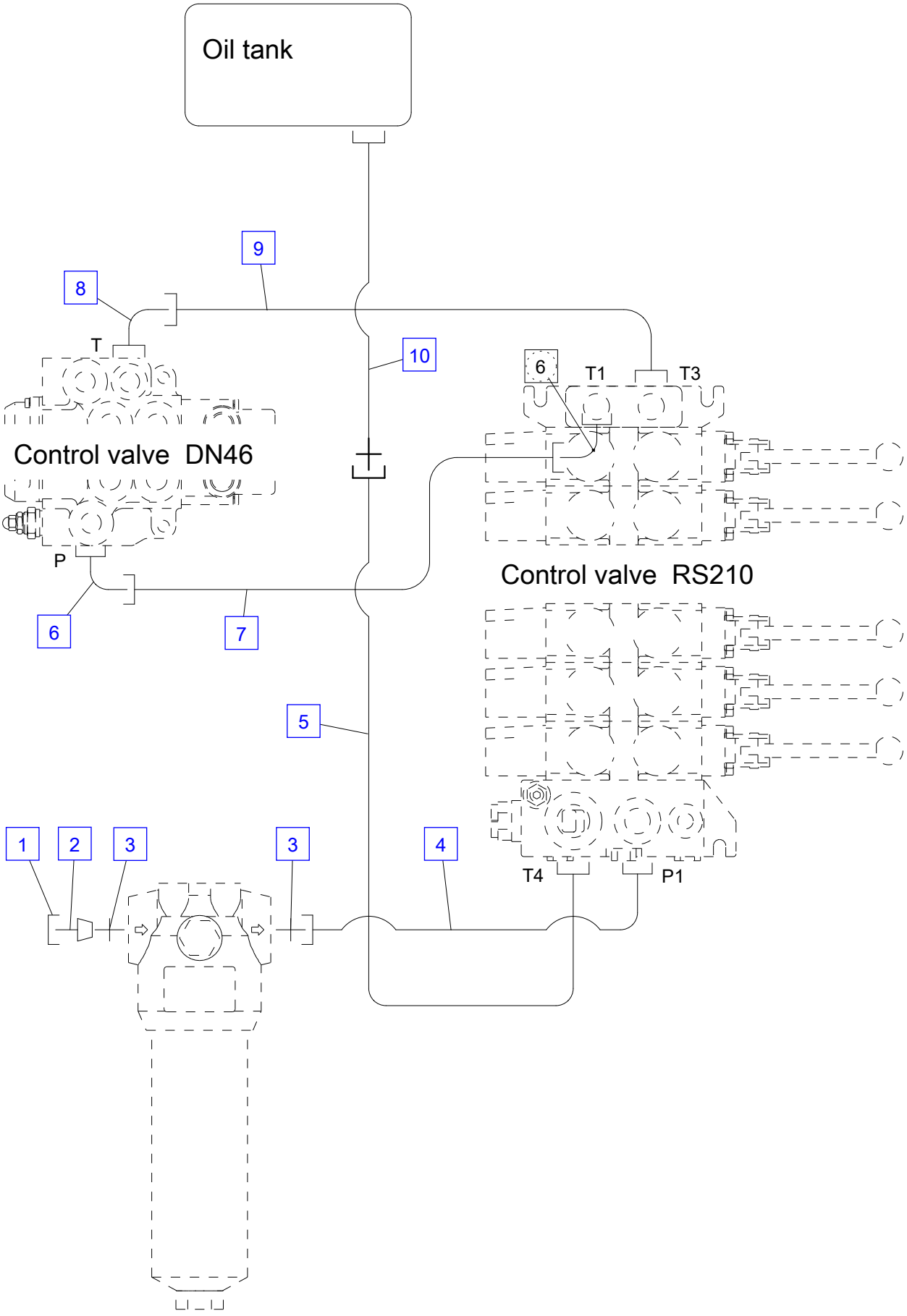
Oil tank
9
8
T
10
6
T1
T3
Control valve DN46
P
6
7
Control valve RS210
5
1
2
3
3
4
T4
P1
High pressure filter

Central lubrication system

No.	Spare part	Qty.	Description	Dimension
1	HLA1098	1	Fitting	
2	HXE 714	1	Grease block	
3	ES 087	1	Screw	M 6x30 ISO4762 - 8.8
4	EA 005	4	Grease nipple	M10x1 DIN71412
5	EK1012	1	Grease block	
6	EA 623	2	Fitting	WE 06-LM
7	EA 001	1	Adaptor	WH 06L M 10x1
8	EA 002	1	Fitting	GE 6L M10x1-ED
9	EH1434	1	Grease hose (Metered good)	
10	EA 641	8	Nut	M 6 L
11	EA 265	8	Cutting ring	D 6 S

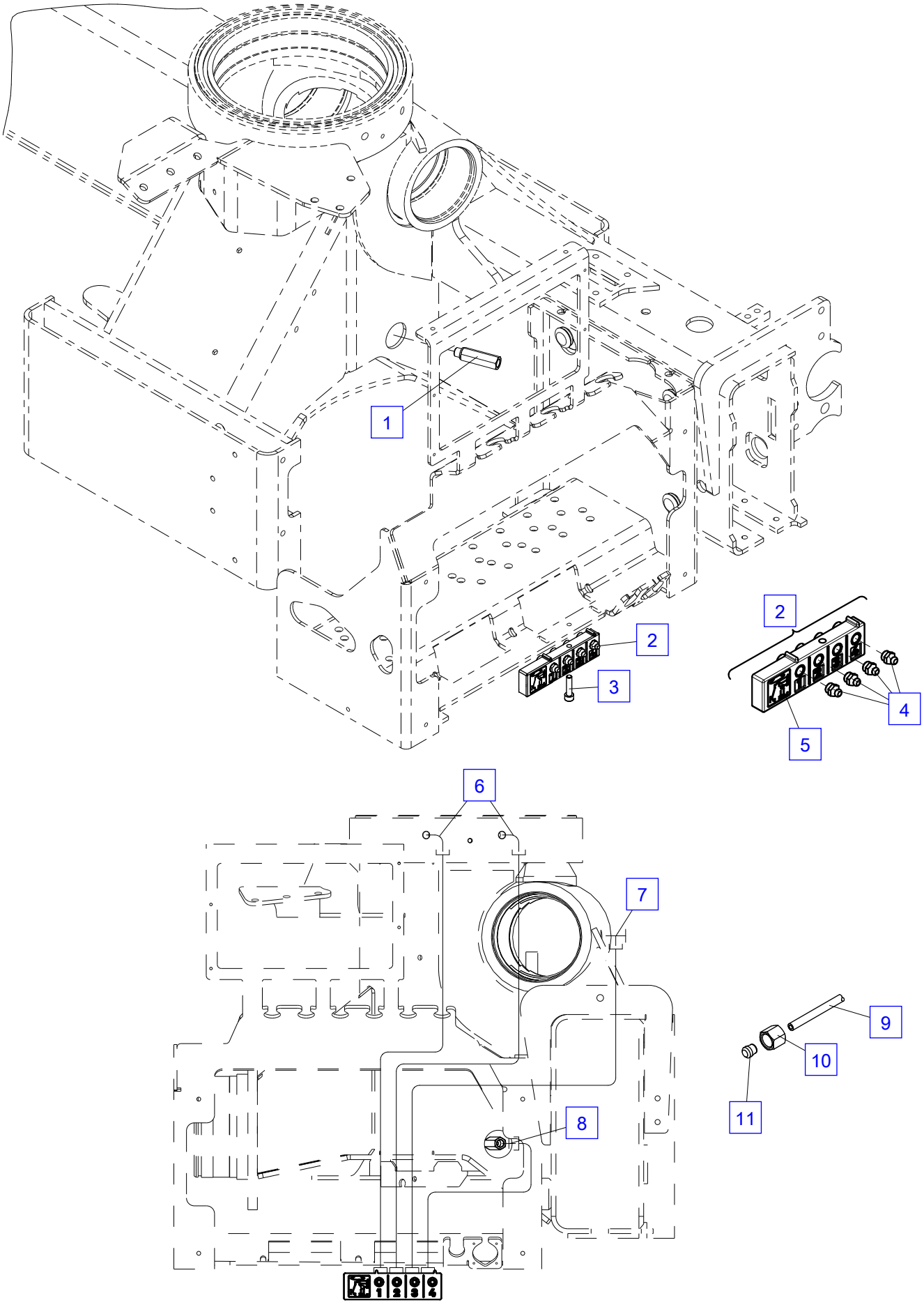
1
2
3
2
4
5
6
7
8
9
10
11

Hoses FL

No.	Spare part	Qty.	Description	Dimension
1	EH6077	2	Hose	NW 8x3800
2	EH6078	2	Hose	NW 8x4200
3	EH6079	2	Hose	NW 8x6300
4	EA 039	2	Fitting	GE 12S R3/8"-ED
6	EH 808	1	Protection hose	NW 102x2300
6	EH 878	1	Protection hose	NW 102x1000

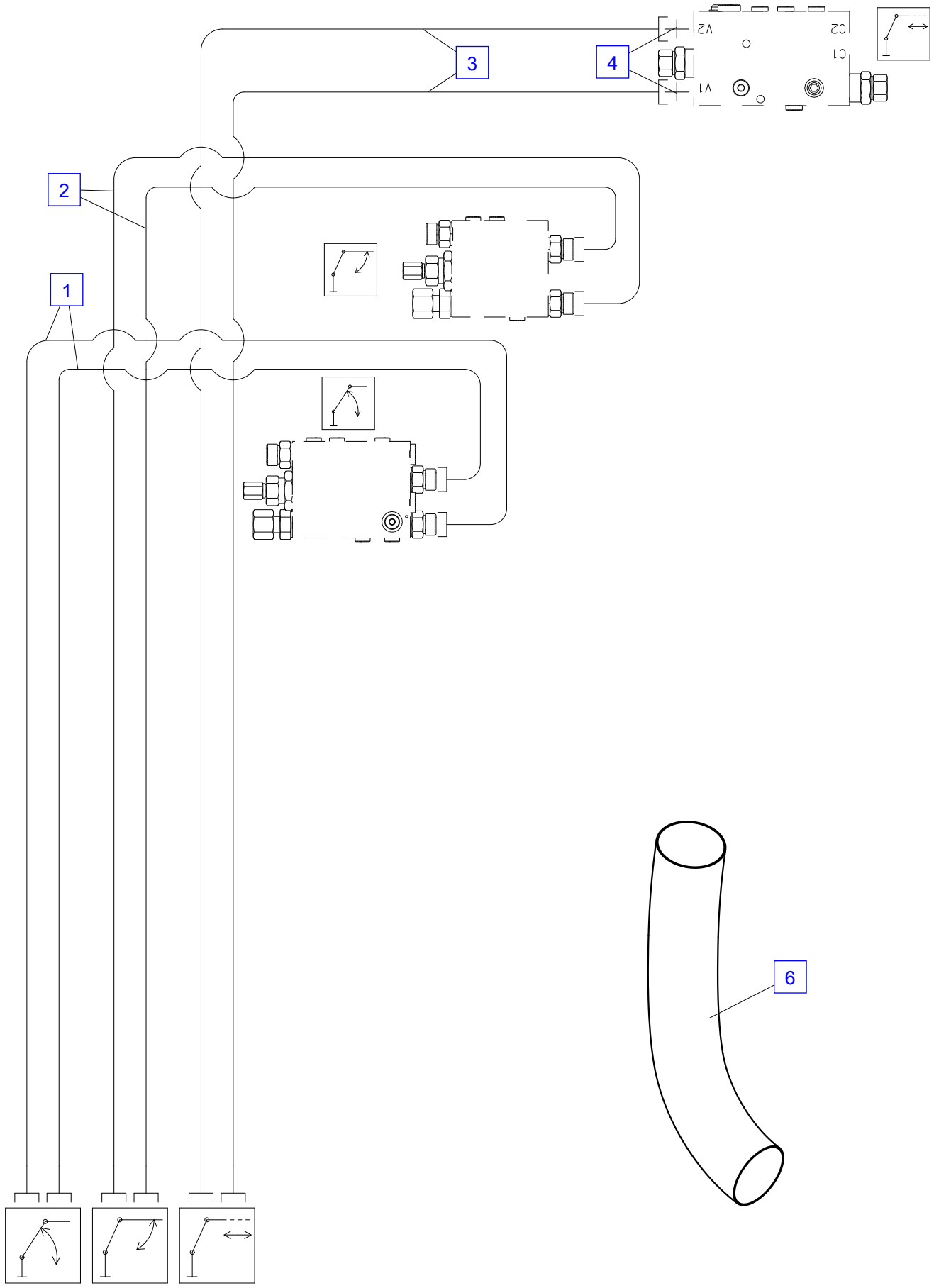
3
4
2
1
6

Extension box R1

No.	Spare part	Qty.	Description	Dimension
1	ES1089	20	Screw	M 8x10 DIN7984 - 8.8
2	HTR1529	1	Shim plate	1 mm
2	HTR3801	1	Shim plate	0.5 mm
3	HTR1427	1	Shim plate	5 mm
3	HTR3799	1	Shim plate	4 mm
4	HF 108	7	Guide	4 mm
5	EM 540	8	Nut	M 24x1.5 DIN 80705
7	HIG 653A	4	Threaded pin	D024.0xL0037.0
8	HTR3550	2	Guide piece	10 mm
9	EK 003	4	Washer	D8.4 ISO7089
10	ES 006	4	Screw	M8x25 ISO4762 - 10.9
11	HXE1718	1	Tread roller, cpl.	
12	HF 007	2	Guide	5 mm
13	S104A11-B	1	Outrigger-R1	
14	S104A10-B	1	Outrigger-R1	

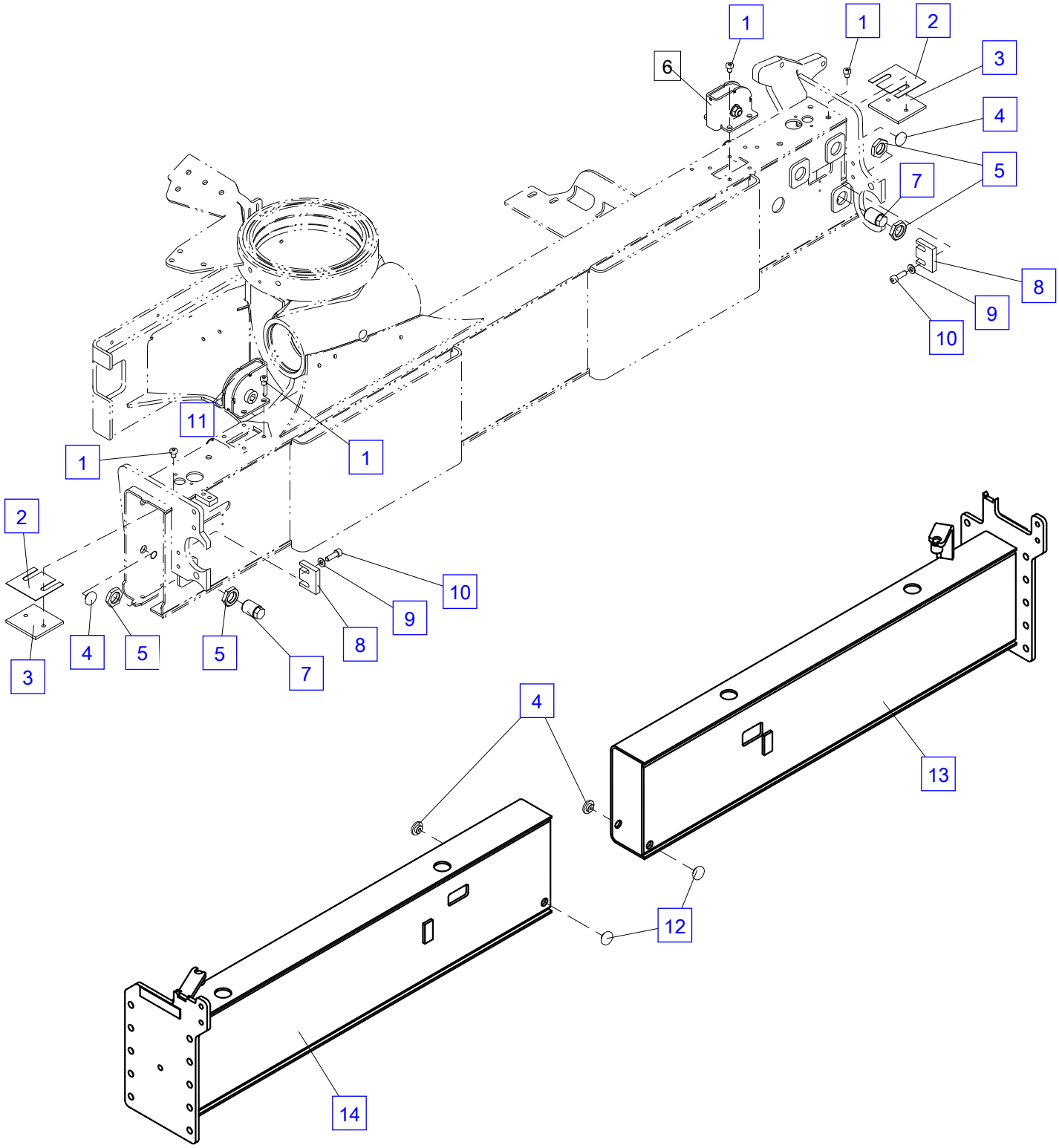
1
1
2
3
6
4
5
7
8
9
10
11
1
2
3
4
5
5
7
8
9
10
4
13
12
14

Hose tray

No.	Spare part	Qty.	Description	Dimension
1	HXE 275	1	Hose tray	
2	EF 041	4	Spring	
3	ES 275	2	Screw	M 8x30 DIN 7984
4	EK 340	2	Washer	D 8 ISO7089-A2-HV140
5	EM 026	2	Nut	M8 DIN985

Hose tray

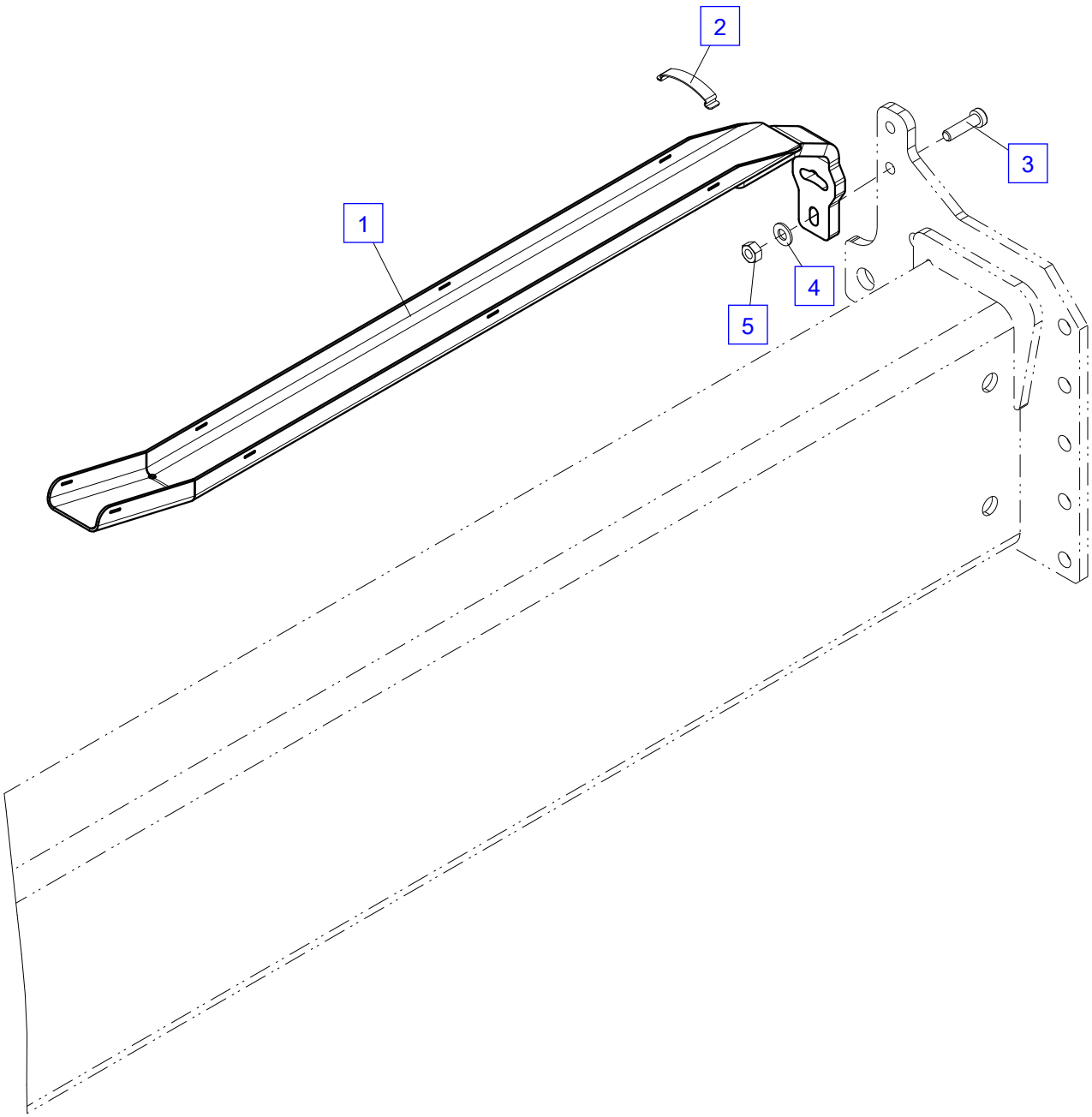

Extension - box piping R1,R2

No.	Spare part	Qty.	Description	Dimension
1	EH 679	4	Hose (STZY3)	NW 8x2300
2	HLR 1694	1	Pipe	D 12
3	HLR 1482	1	Pipe	D 12
4	HLR17586	1	Pipe	D 12
5	HLR17585	1	Pipe	D 12
6	EH12907	2	Protection hose (STZY3)	NW 50x2300

Extension - box piping R1,R2

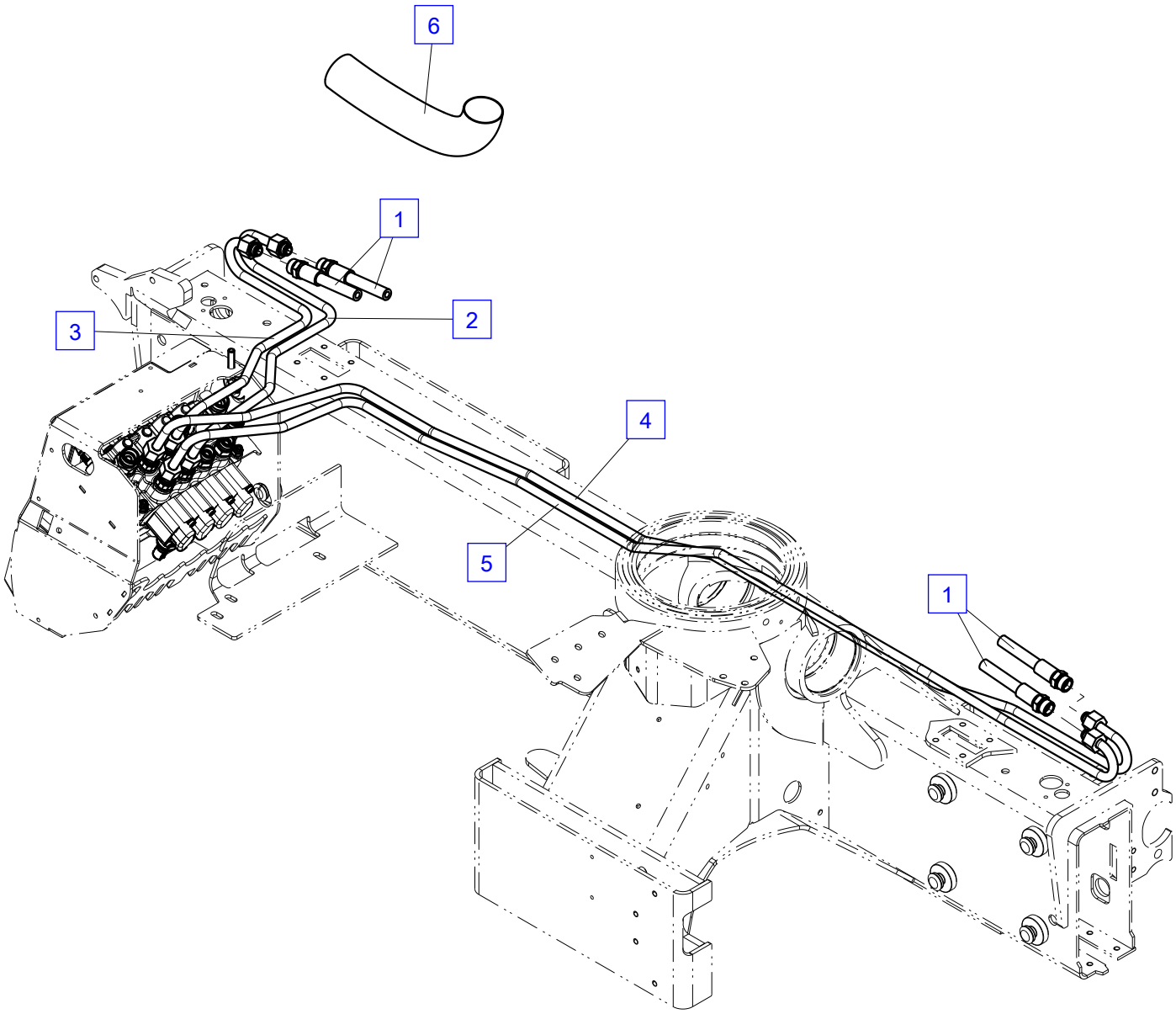

Oil tank, cpl. TKKR

No.	Spare part	Qty.	Description	Dimension
1	UT084A	1	Oil tank, cpl. 50l	50l
2	ES 265	2	Screw	M8x20 ISO4762 - 8.8
3	EM 026	2	Nut	M8 DIN985
4	HTR 748	1	Rubber mat	
5	EA1514	1	Fitting	GE 18-LR 1/1-ed
6	HTR 750	2	Rubber mat	
7	EA 163	1	Double nipple	R 1 1/4"
8	EA1512	1	Shut-off cock	G 1 1/4"

Oil tank, cpl. TKKR

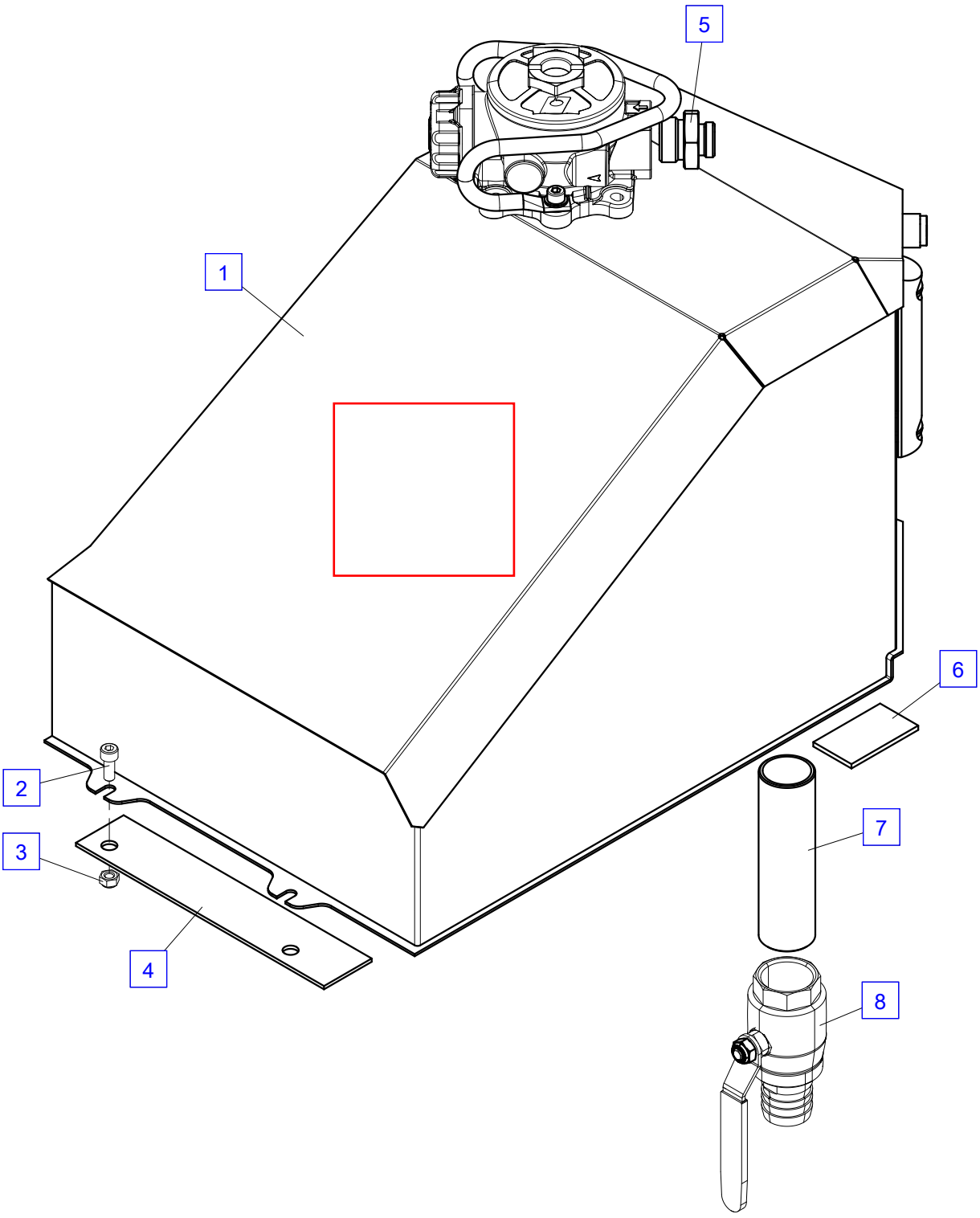

Crane column

No.	Spare part	Qty.	Description	Dimension
1	S104S01SB+R3020	1	Crane column (Standard colour RAL 3020)	l=1406 mm
2	HXL 020	1	Hose ring	D=100mm
3	ES 264	1	Screw	M8x16 ISO4762 - 8.8
4	ES 419	1	Screw	M6x12 ISO14581 - 8.8
5	HTR3852	1	Stiffening plate	
6	HI7694	1	Pin	
7	ELG 002	2	Bearing bush	D50x55x40
8	EA 005	1	Grease nipple	M10x1 DIN71412
9	HBS1280	1	Spacer	1.5 mm
10	EQ 036	1	Circlip	D40 DIN471
11	UP1554A	1	Lifting cylinder see page 0100.01001	
12	ES1658	1	Screw	M 6x12 8.8
13	EK1239	1	Cover	

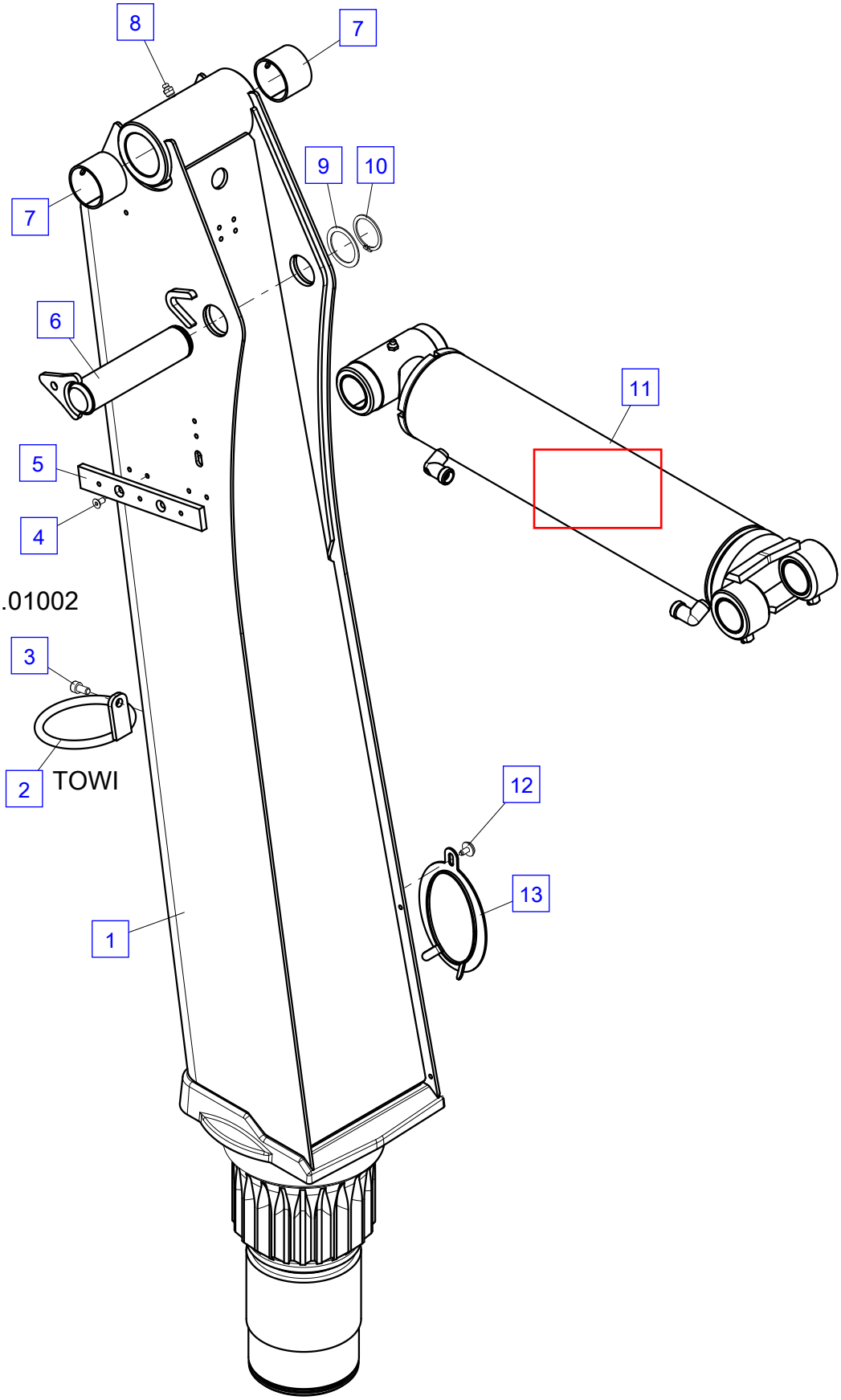
8
7
9
10
7
6
11
5
4
Hose clip
see page 0200.01002
3
2
TOWI
12
13
1

Lifiting cylinder - details

No.	Spare part	Qty.	Description	Dimension
	UP1554A	1	Lifting cylinder	
1	EA 558	2	Grease nipple	M10x1 DIN71412
2	ELG 179	4	Bearing bush	D40x44x40
3	HY1417	1	Cylinder tube	
4	TD 626A	1	Seal kit	
5	HK 780	1	Piston	D100xL045.0 M067x2.0
6	HV 598A	1	Cylinder nut	M104x2.0 d070xL070
7	HSK1272A	1	Piston rod	Cr
8	HBD 217	1	Spacer	L0125.0xB0049xS001
9	EA 005	1	Grease nipple	M10x1 DIN71412

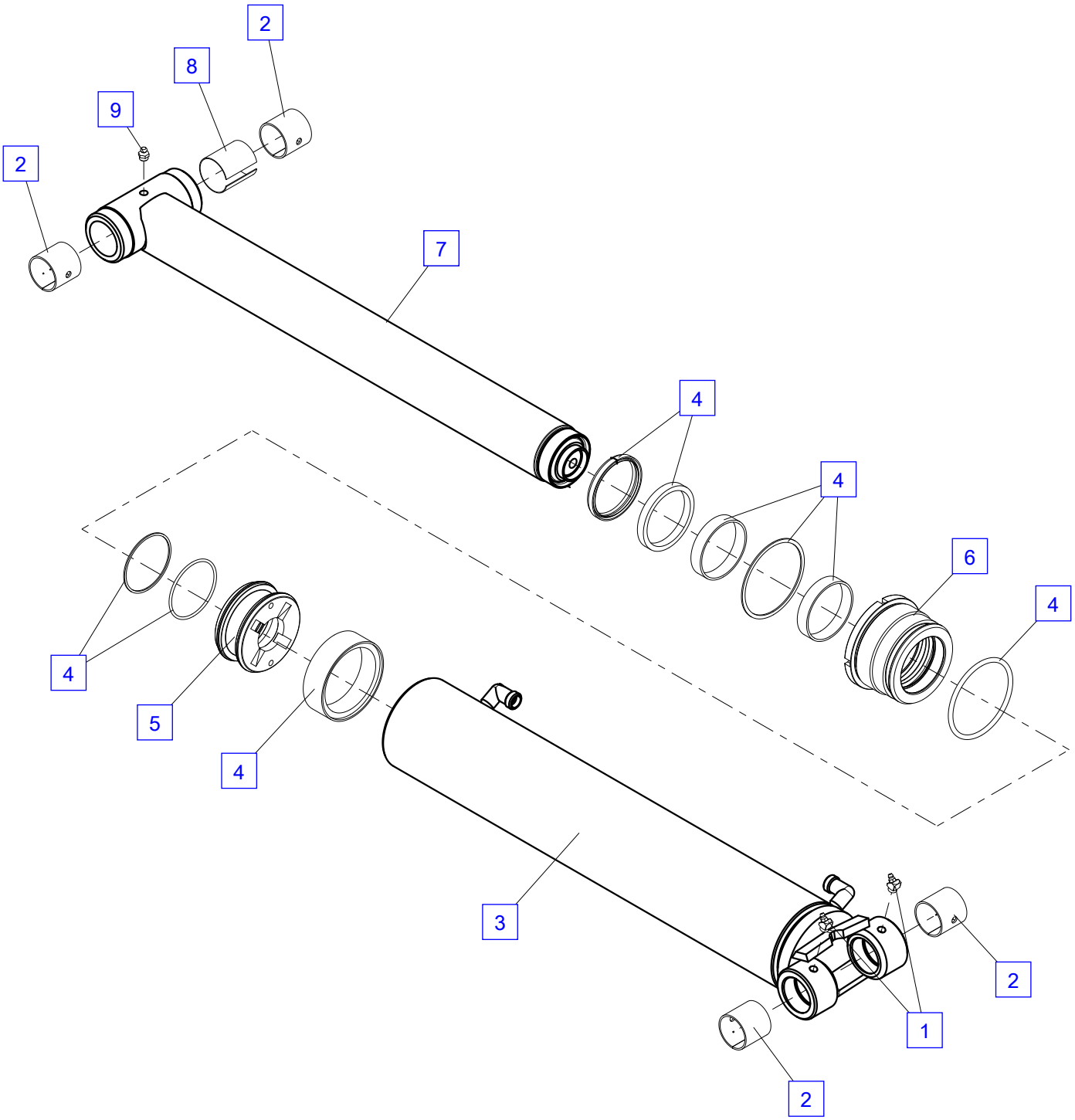
2
8
9
2
7
4
4
6
4
4
5
4
3
2
1
2

Hose clip

No.	Spare part	Qty.	Description	Dimension
1	EZ 223	1	Hose clip	D 15-18
2	HX 336	1	Stiffening plate	S0004 B0025 L0195
3	EK 043	1	Washer	D6.4 DIN134
4	ES 103	1	Screw	M 6x45 DIN 6912 8.8

Hose clip

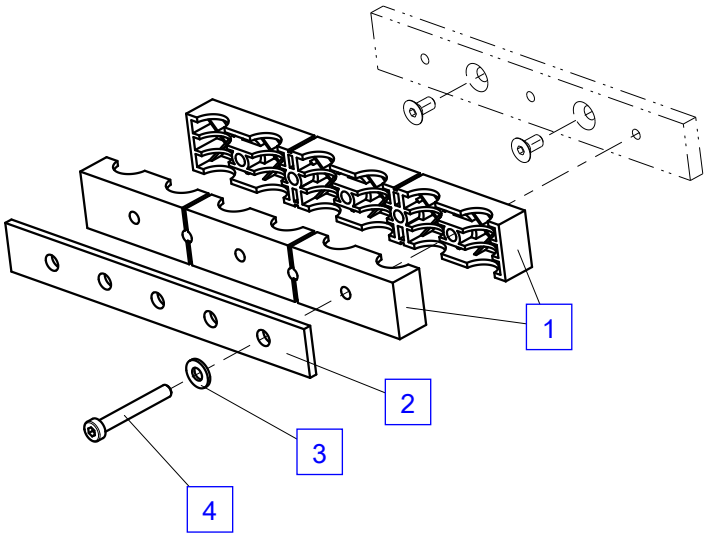

Breakdown light

No.	Spare part	Qty.	Description	Dimension
1	ES1658	2	Screw	M 6x12 8.8
2	HA9353	1	Bearer	L0236.3xB0116xS006
3	EEA15937	1	Light, green	M 12
3	EEA14738	1	Connecting cable	3 m
3	EEA17020	1	Adapter cable	MIC - M 12

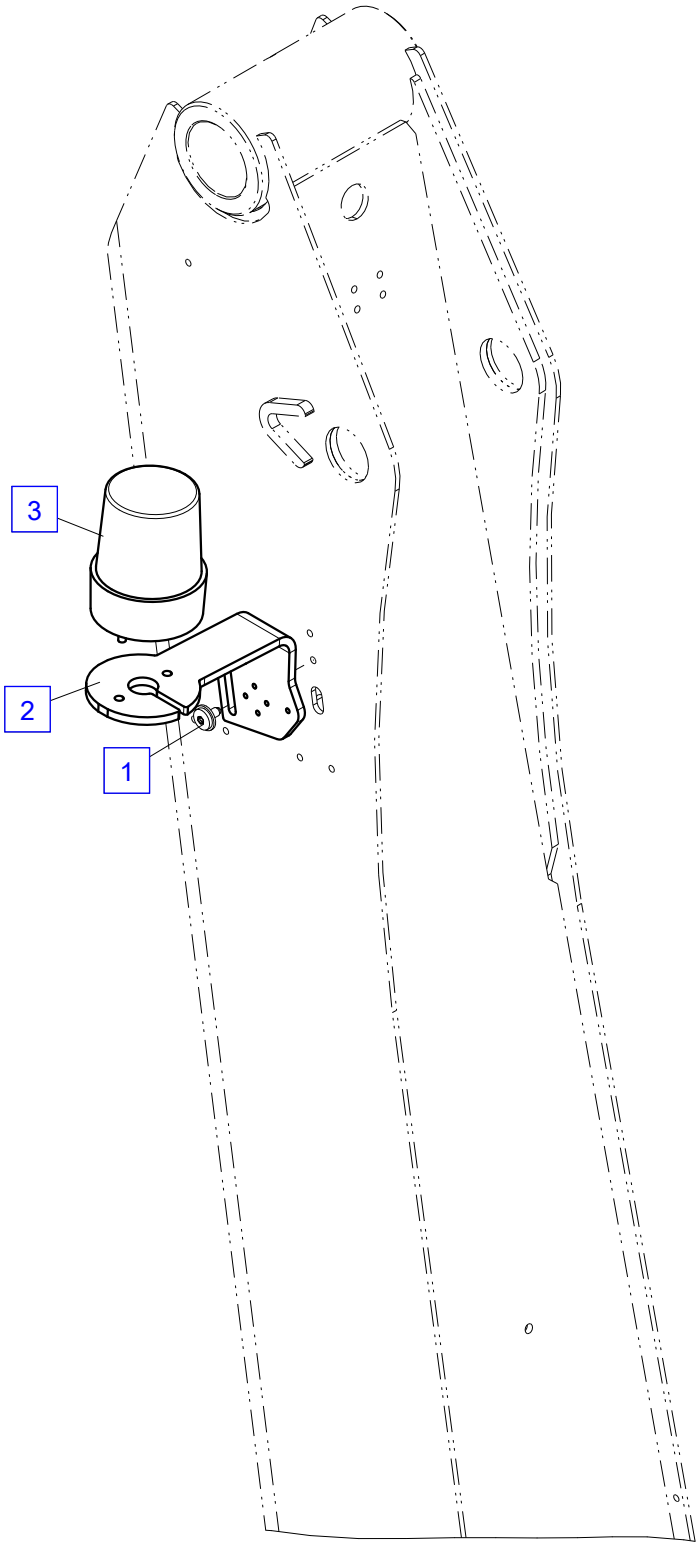
3
2
1

Piping - lifting cylinder PALTRONIC

No.	Spare part	Qty.	Description	Dimension
1	UV439-370	1	Load holding valve see page 0200.02501	
2	HLR 9026	1	Pipe	D 12
3	EEA5763	2	Pressure transducer Cable harness see page 0200.02600	600 bar SIL2 Wika

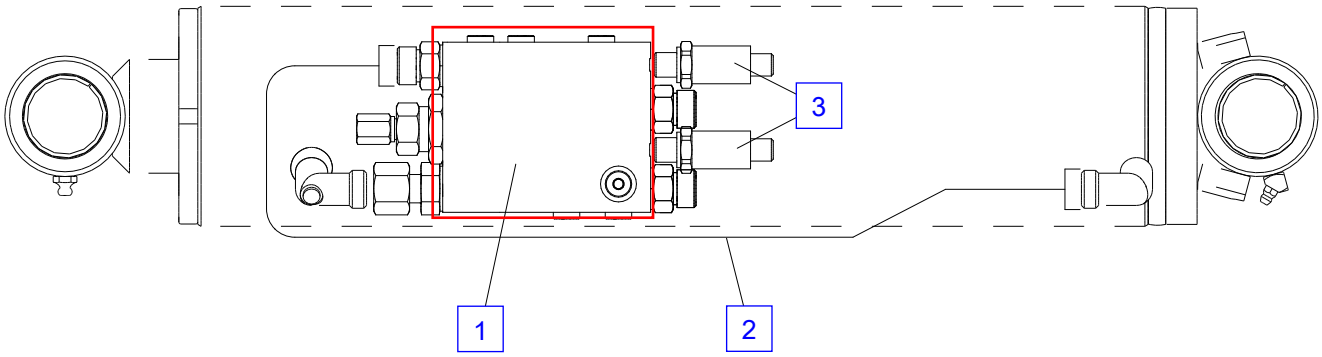
3
1
2

Load holding valve UV439-330/370

No.	Spare part	Qty.	Description	Dimension
	UV439-370	1	Load holding valve	
1	EA 039	3	Fitting	GE 12S R3/8"-ED
2	EA 201	1	Fitting	EGE 12S R3/8-ED

Load holding valve UV439-330/370

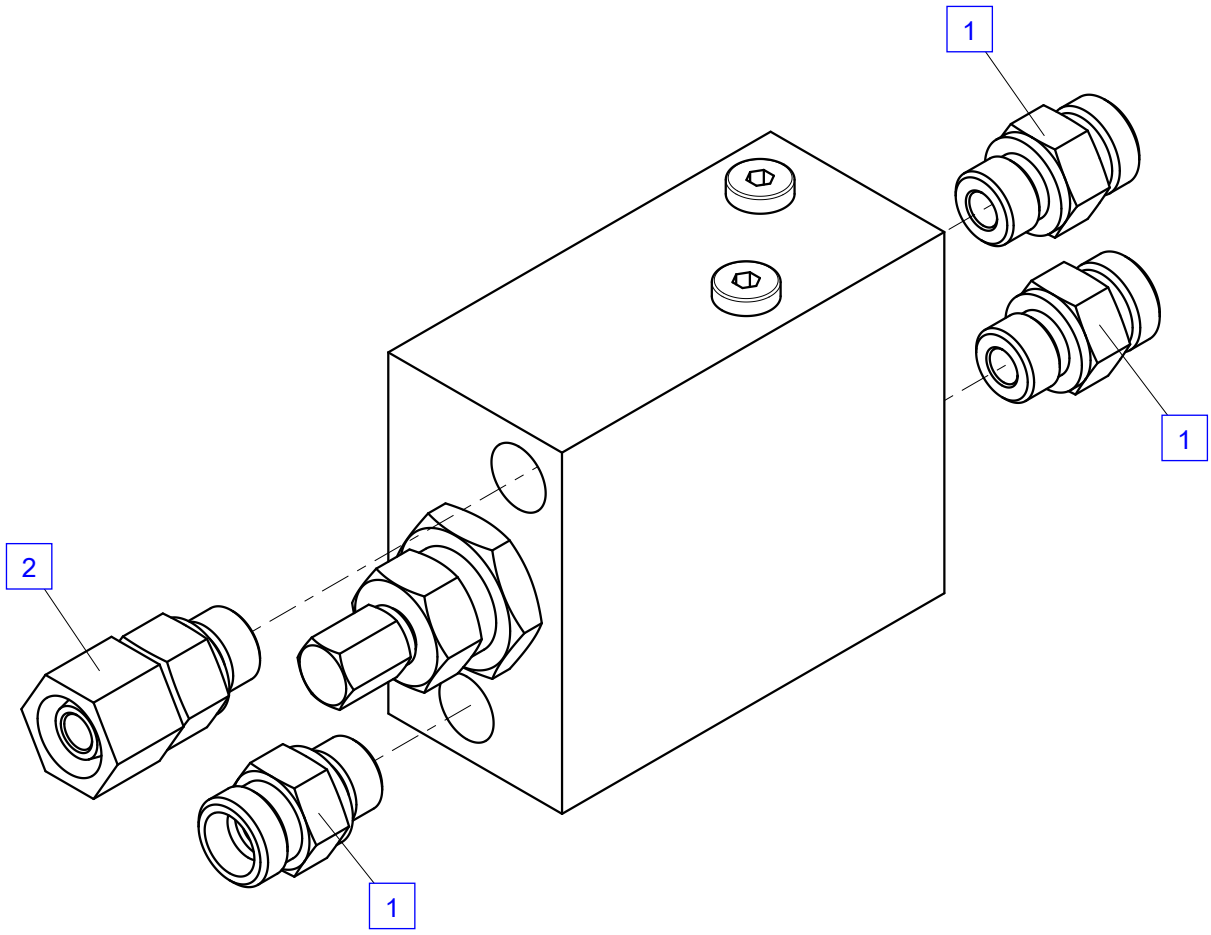

Pressure transducer PT040

No.	Spare part	Qty.	Description	Dimension
1	EEA14620	1	Kit Pressure transducer	
2	EEA14621	1	Kit Pressure transducer	

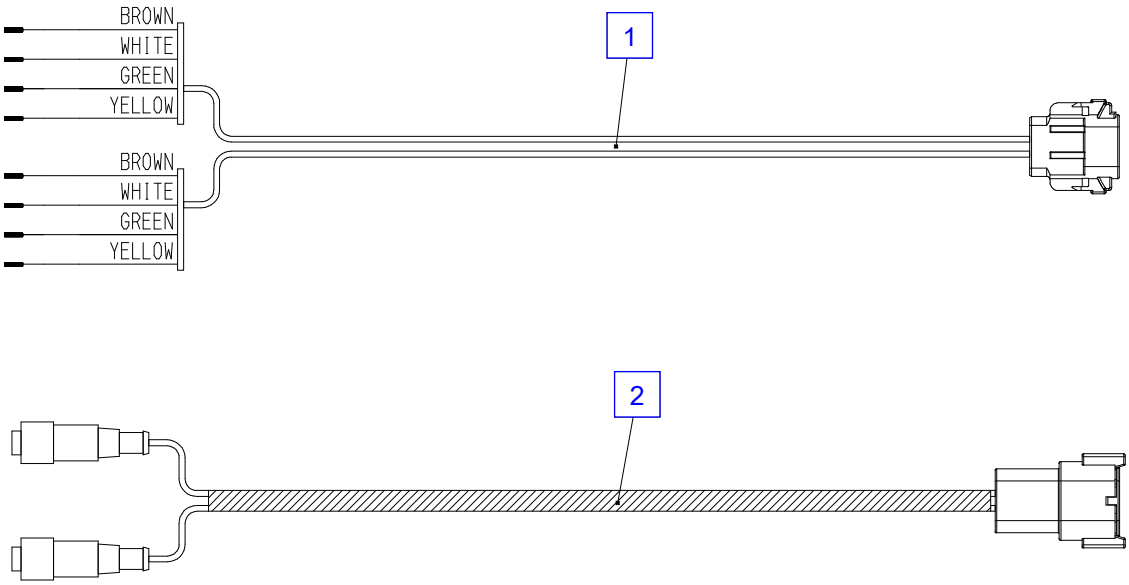
BROWN
WHITE
GREEN
YELLOW
BROWN
WHITE
GREEN
YELLOW
1
2

Main boom

No.	Spare part	Qty.	Description	Dimension
1	S104H01SB+R3020	1	Main boom (Standard colour RAL 3020)	
2	HBS1280	1	Spacer	1.5 mm
3	EQ 036	1	Circlip	D40 DIN471
4	ES 160	2	Screw	M5x10 - DIN964
5	EA 005	1	Grease nipple	M10x1 DIN71412
6	HXE9152	1	Bearer	
7	ELG 179	2	Bearing bush	D40x44x40
8	ES 041	2	Screw	M12x25 ISO4762 - 10.9
9	HD 398	2	Washer	
10	HT21164	2	Spacer	1.5 mm
11	HA9851	1	Hose clamp	
12	ES 080	2	Screw	M 6x35 DIN 6912
13	HIG 691	1	Pin	
14	ES 653	2	Screw	M 10x12 ISO4762- 8.8
15	HA2545	1	Protecting sheet	L0789.6xB0277.3xS003
16	HF 047	3	Guide	2 mm
17	UP1555A	1	Outer boom ram see page 0300.01001	Cr
18	HI2859	1	Pin	D=40 L=170
19	HIG 337	1	Pin	
20	EK 898	1	Control decal	
21	EZ2697	1	Edge protection (metro goods)	9-12 mm

Main boom

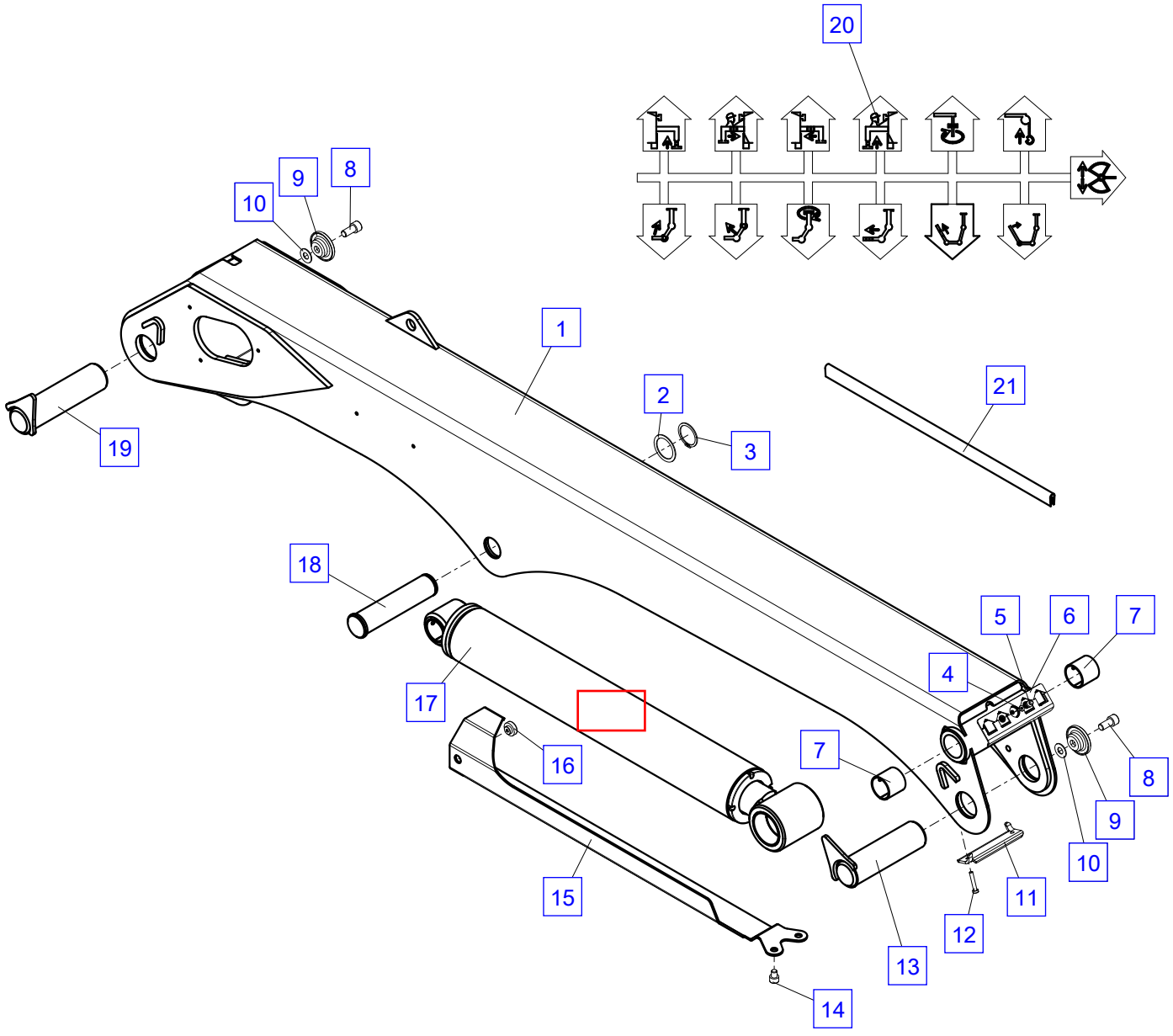

Outer boom ram - details

No.	Spare part	Qty.	Description	Dimension
	UP1555A	1	Outer boom ram	Cr
1	ELG 242	2	Bearing bush	d060xD065xL030
2	HBD 316	1	Spacer	
3	EA 005	1	Grease nipple	M10x1 DIN71412
4	HSK1273A	1	Piston rod	Cr
5	TD 626B	1	Seal kit	
6	HV 598A	1	Cylinder nut	M104x2.0 d070xL070
7	HK 780	1	Piston	D100xL045.0 M067x2.0
8	HY1418	1	Cylinder tube	
9	ELG 004	2	Bearing bush	D44x40x30
10	HBD 102	1	Spacer	
11	EA 558	1	Grease nipple	M10x1 DIN71412

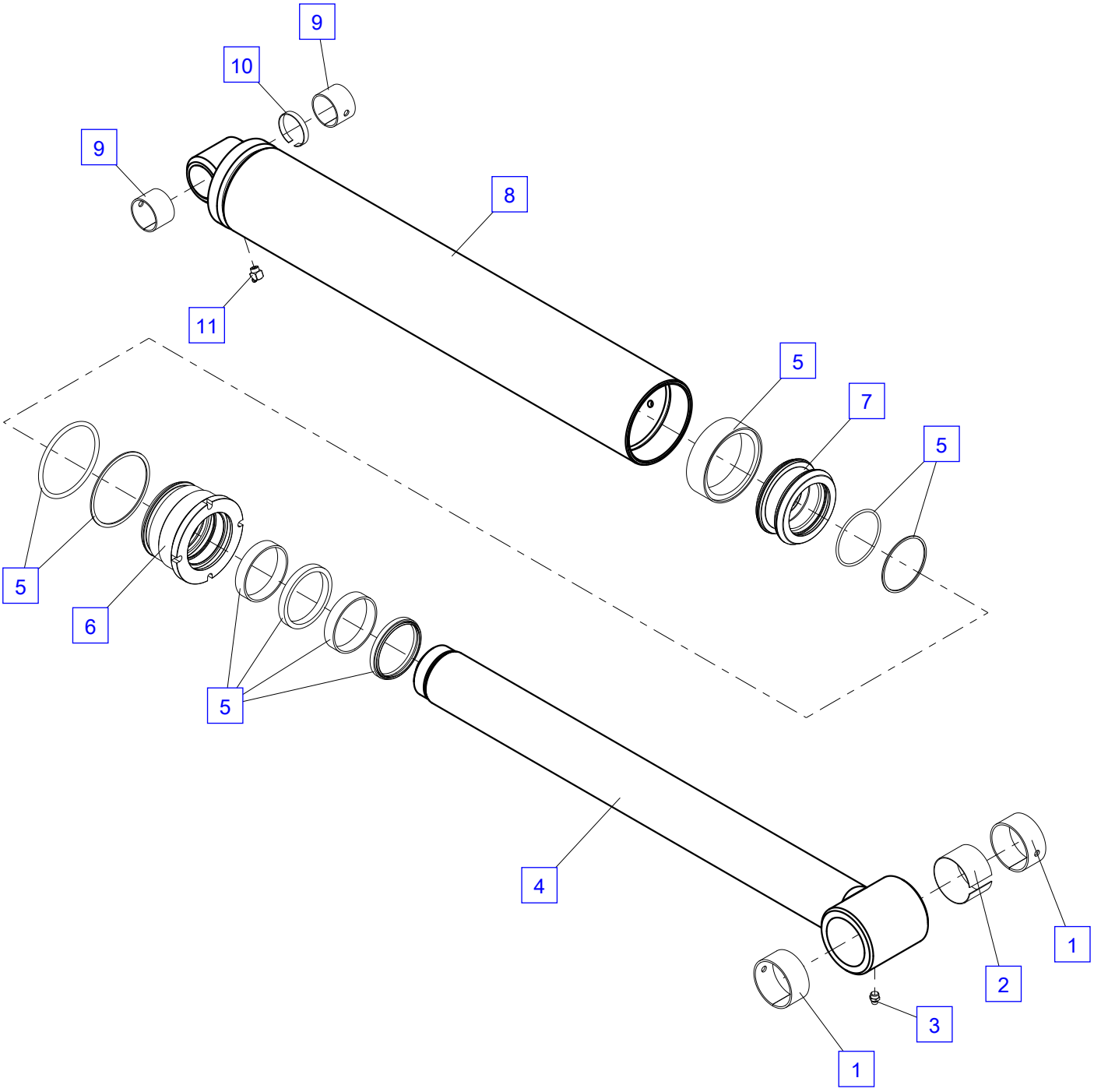
9
10
9
8
11
5
7
5
5
6
5
4
1
2
3
1

Outer boom

No.	Spare part	Qty.	Description	Dimension
1	S104K02SB+R3020	1	Outer boom (Standard colour RAL 3020)	
2	ELG 002	2	Bearing bush	D50x55x40
3	HI 513	1	Pin	D016.0xL0065.0
4	EQ 218	2	Winding pin	D 6x30 ISO8752
5	HTR 659	2	Guide block	8 mm
5	HTR 837	2	Guide block	6 mm
5	HTR1024	2	Guide block	10 mm
6	ES1082	6	Screw	M 8x12 DIN 7984 8.8
7	ES 051	1	Screw	M8x16 DIN7984 - 8.8
8	HI2836	1	Pin	D 40x159 mm
9	EA 005	1	Grease nipple	M10x1 DIN71412
9	ES 297	1	Screw	M8x25 ISO14581 - 8.8
10	HTR3920	1	Stop buffer	10 mm
10	HTR3921	1	Stop buffer	12 mm
10	HTR3922	1	Stop buffer	13 mm
10	HTR3956	1	Stop buffer	15 mm
10	HTR3957	1	Stop buffer	16 mm
10	HTR3958	1	Stop buffer	18 mm
10	HTR3959	1	Stop buffer	20 mm
10	HTR3923	1	Stop buffer	14 mm
10	HTR3924	1	Stop buffer	8 mm
11	ES 109	2	Screw	M 8x20 ISO14581- 8.8
11	ES 297	2	Screw	M8x25 ISO14581 - 8.8
12	HF1380A+00008	4	Guide block	8 mm
12	HF1380A+00009	4	Guide block	9 mm
12	HF1380A+00010	4	Guide block	10 mm
12	HF1380A+00011	4	Guide block	11 mm
12	HF1380A+00012	4	Guide block	12 mm
12	HF1380A+00013	4	Guide block	13 mm
12	HF1380A+00014	4	Guide block	14 mm
13	HTR4127	3	Guide block	0.5 mm
13	HTR4125	3	Guide block	5 mm
13	HTR2951	3	Guide block	6 mm
13	HTR3331	3	Guide block	7 mm
13	HTR2952	3	Guide block	8 mm
13	HTR3667	3	Guide block	9 mm
13	HTR2953	3	Guide block	10 mm
13	HTR4280	3	Guide block	12 mm
14	ES1089	4	Screw	M 8x10 DIN7984 - 8.8
14	ES1082	4	Screw	M 8x12 DIN 7984 8.8
14	ES 051	4	Screw	M8x16 DIN7984 - 8.8
15	HA3302A	1	Bearer	L0161.0xB0089.8xS006
16	EK 003	4	Washer	D8.4 ISO7089
17	EM 014	2	Nut	M 6 DIN 985-8
18	EZ 124	1	Hose clip	D017x4.0
19	HTR 810B	1	Plate	L0090.0xB0015.0xS006.0
20	EK 190	2	Washer	D6 DIN134 - 06 - ST
21	ES 105	2	Screw	M6x40 ISO4762 - 10.9

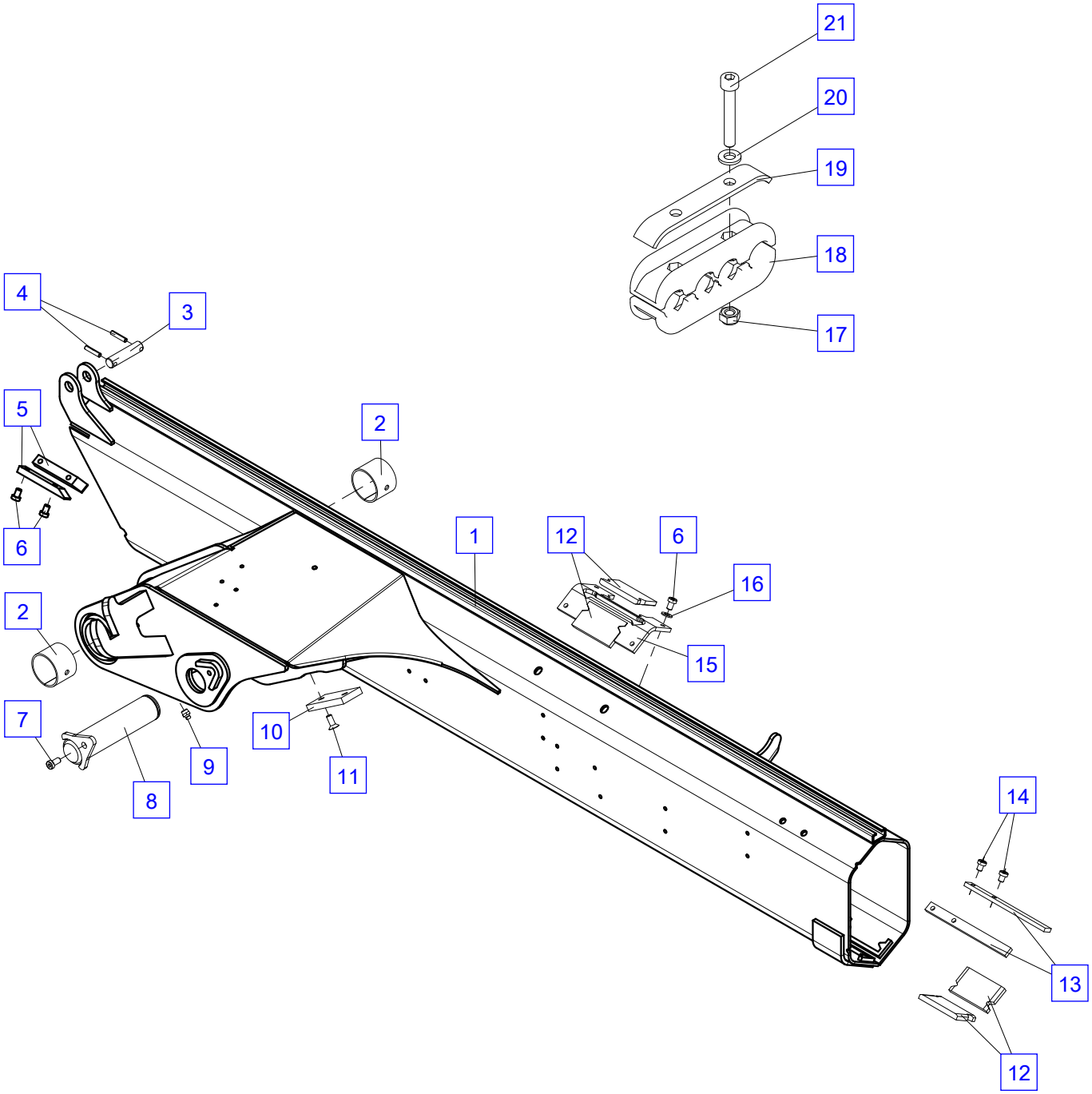
21
20
19
18
17
4
3
5
2
6
1
12
6
16
2
15
7
10
9
11
8
14
13
12

Linkage system

No.	Spare part	Qty.	Description	Dimension
1	HI2834	1	Pin	D040.0xL0217.0
2	HHK 321	1	Pull lever	
3	HHK 320	1	Pull lever	
4	HBS1280	1	Spacer	1.5 mm
5	EQ 036	1	Circlip	D40 DIN471
6	EQ 083	1	Circlip	D 60 DIN 471
7	HBS 880	1	Spacer	2 mm
8	HBK 073	2	Bearing bush	d060xD065x045.0
9	EA 005	3	Grease nipple	M10x1 DIN71412
10	HI2835	1	Pin	D060.0xL0217.0
11	HHK 319	1	Lever	
12	ELG 004	2	Bearing bush	D44x40x30

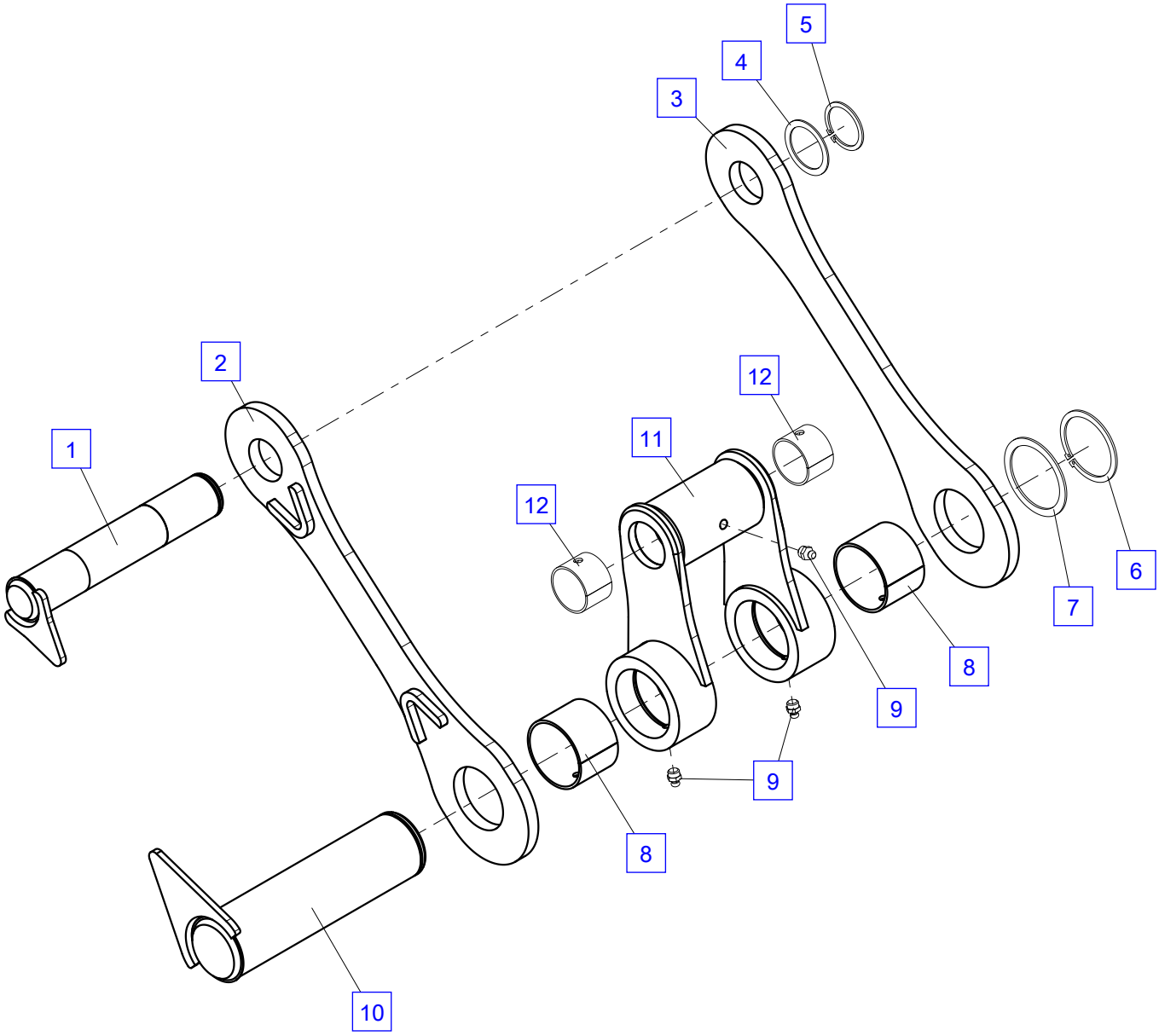
5
4
3
2
12
1
11
12
6
7
8
9
9
8
10

Inclination switch

No.	Spare part	Qty.	Description	Dimension
1	EEA12409	1	Pendulum (ON 0°+/-1°)	M 12
1	EEA14740	1	Connecting cable	7 m
2	EK 043	2	Washer	D6.4 DIN134
3	ES 414	2	Screw	M6x10 ISO4762 - 8.8

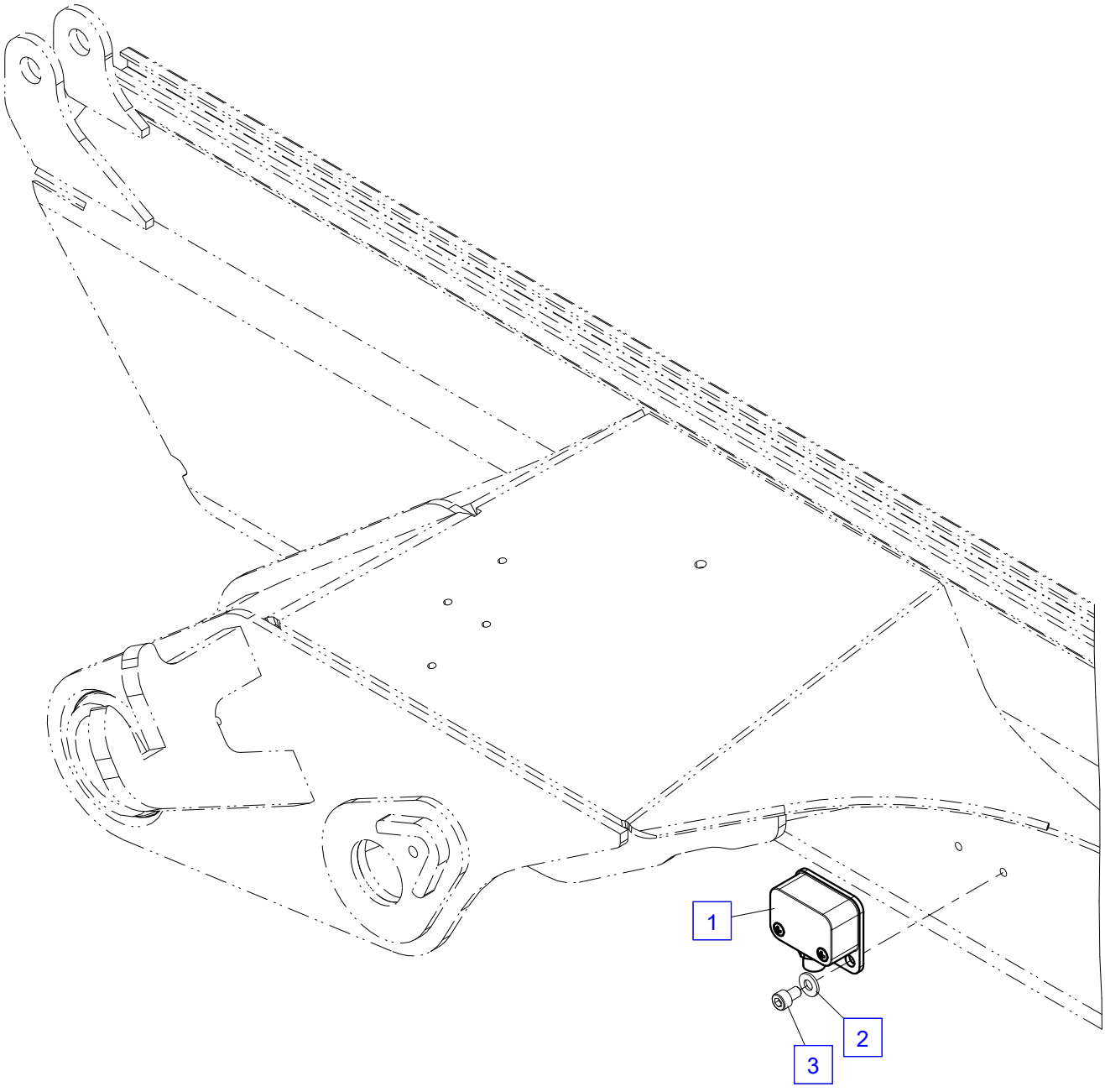
1
2
3

Extension boom 1 + piping

No.	Spare part	Qty.	Description	Dimension
1	S104T01-A	1	Boom extensions	188x100 mm
2	HF 608A	2	Guide	1,5 mm
2	HF 575A	2	Guide	2 mm
2	HIA 130A	2	Guide	3 mm
2	HF 576A	2	Guide	4 mm
2	HF 577A	2	Guide	5 mm
2	HF 578A	2	Guide	6 mm
2	HF 727A	2	Guide	7 mm
3	HXE1853B	1	Cylinder guide	
4	HBS7789	2	Bushing	
5	EK 003	2	Washer	D8.4 ISO7089
6	ES1532	2	Screw	M 8x25 DIN 7984
7	UP2223A	1	Extension boom ram see page 0500.01102	
8	HT1040	1	Bearer	L=42 B=19 S=6
9	EF 144	1	Spring	
10	EA 039	1	Fitting	GE 12S R3/8"-ED
11	EA 341	2	Blind plug	BUZ 12 S
12	EA 025	2	Nut	M 12 S
13	HLR10465	1	Pipe	D 12
14	HLR10464	1	Pipe	D 12
15	EV4600A	1	Load holding valve	
16	EA1749	1	Adaptor	WEE 12S 3/8"
17	HBS 498	2	Spacer	
18	ES 171	2	Screw	M 6x80 ISO4762- 8.8

Configuration with one hydraulic extension boom

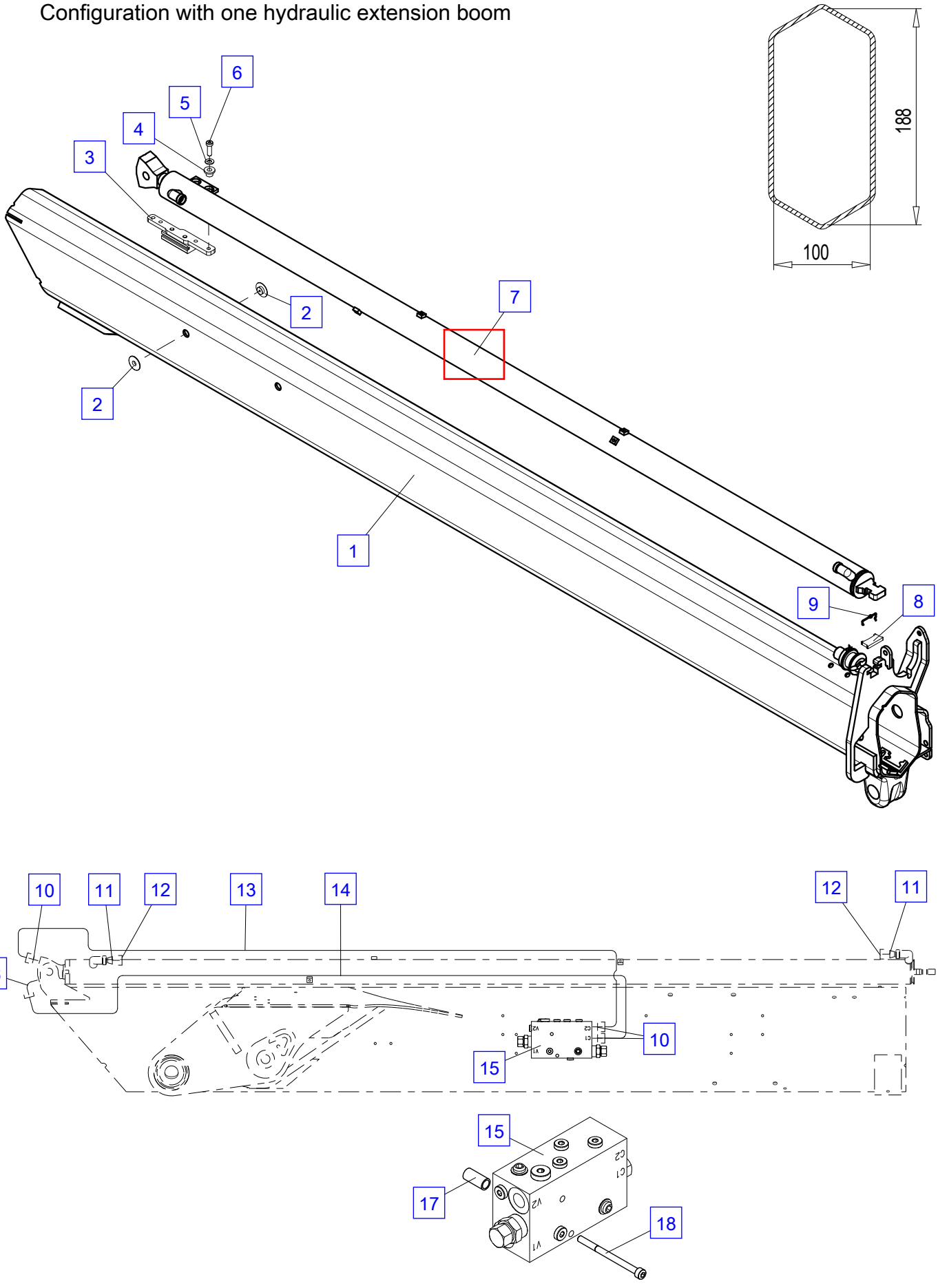

Boom extensions ram UP2223A details

No.	Spare part	Qty.	Description	Dimension
	UP2223A	1	Extension boom ram	
1	HY1622A	1	Cylinder tube	
2	TD 578A	1	Seal kit	
3	HSK1708	1	Piston rod	
4	HV 390A	1	Cylinder nut	M048x1.5 d032xL060
5	HXE3493	1	Inner tube	

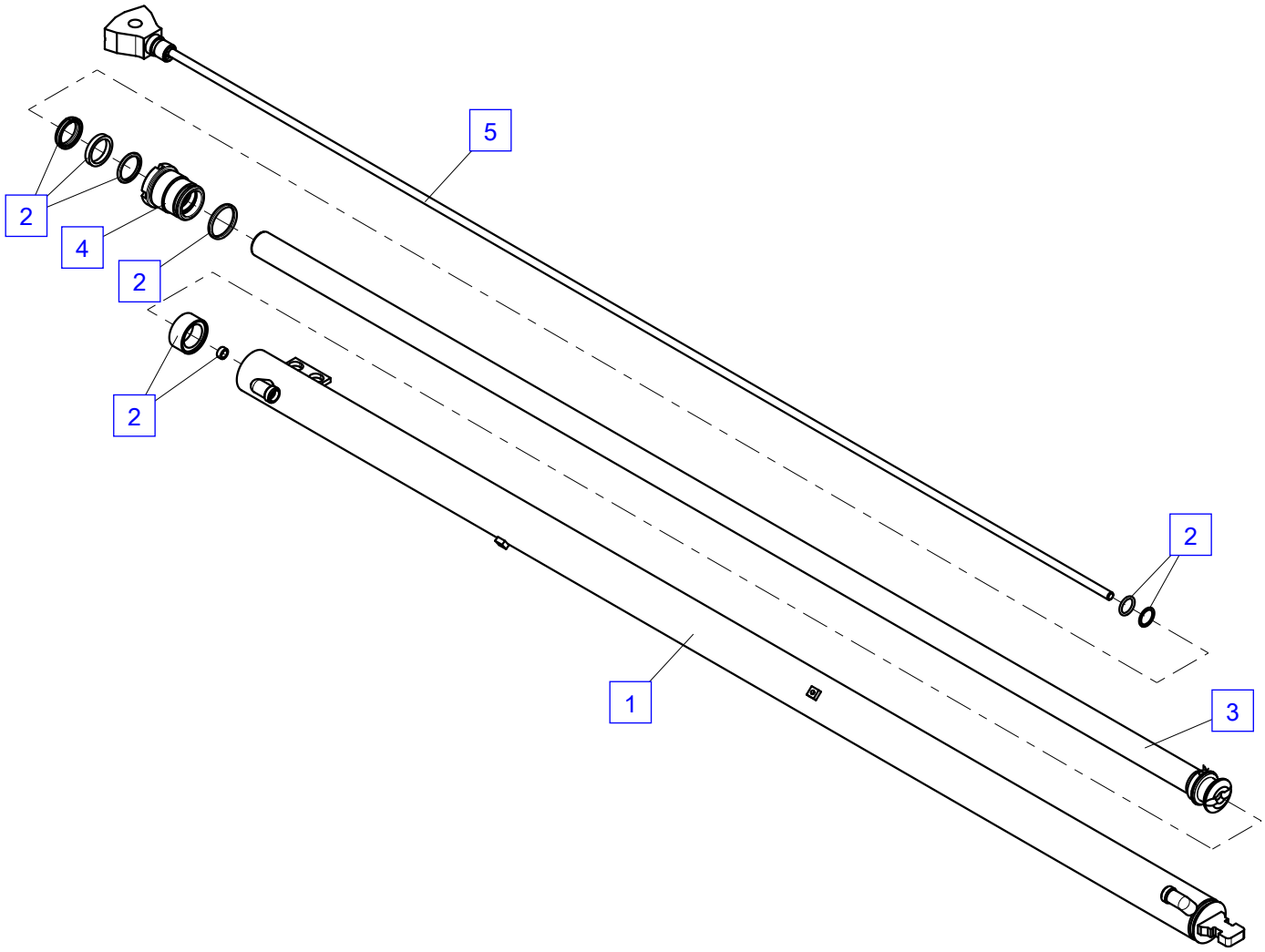
5
2
4
2
2
2
1
3

Extension box control PT040 (R1,R2)

No.	Spare part	Qty.	Description	Dimension
1	HT8878	2	Distance plate	1 mm
1	HT8879	2	Distance plate	2 mm
1	HT8880	2	Distance plate	4 mm
1	HT11247	2	Distance plate	0,5 mm
2	HXE6321	2	Tread roller	
3	EK 003	8	Washer	D8.4 ISO7089
4	ES 265	8	Screw	M8x20 ISO4762 - 8.8
5	EEA12214	2	Inductive switch	M 12

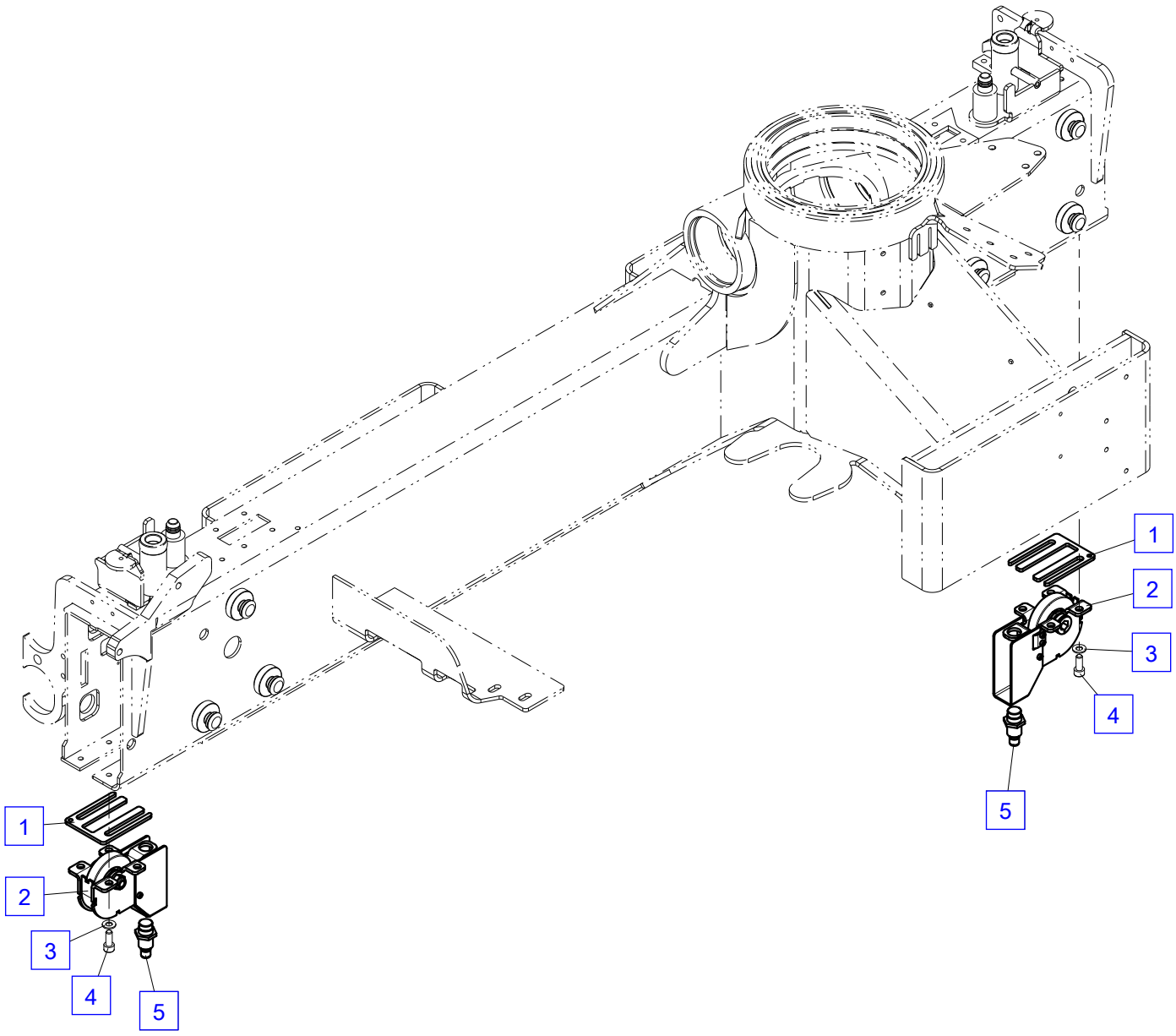
1
2
3
4
5
1
2
3
4
5

Transport position monitoring PT040 TRAN2,5

No.	Spare part	Qty.	Description	Dimension
1	EEA4020	1	Sensor Closer	M 12x1 - M 12x1
1	EEA14605	1	Connecting cable	3 m
2	HA16199	1	Bearer	
3	EK 043	2	Washer	D6.4 DIN134
4	ES 175	2	Screw	M6x16 ISO4762 - 8.8
5	ES 228	1	Set screw	M 6x6 DIN 913
6	HT16305	1	Bracket	

Transport position monitoring PT040 TRAN2,5

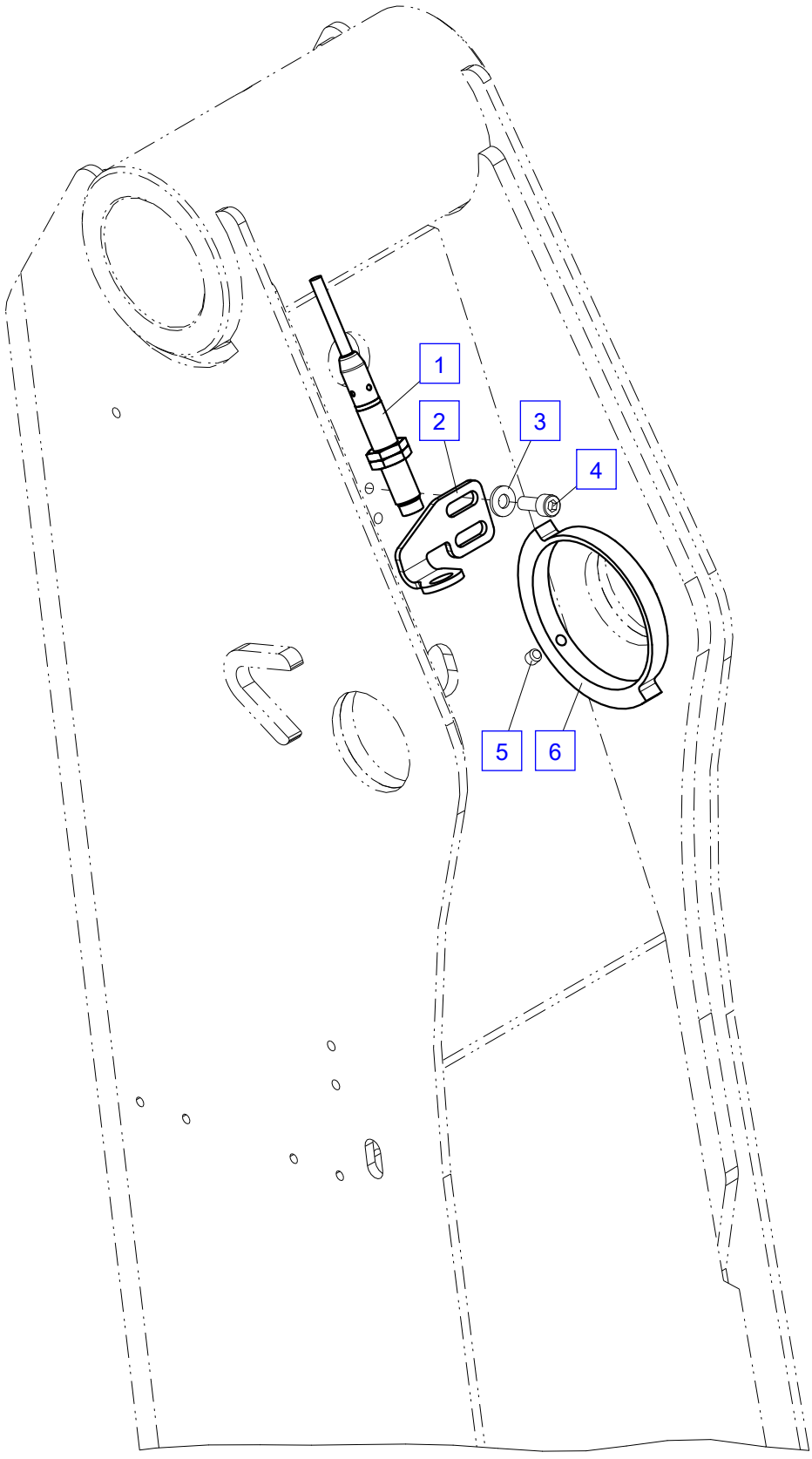

Miscellaneous

No.	Spare part	Qty.	Description	Dimension
1	ES 297	1	Screw	M8x25 ISO14581 - 8.8
1	ES 408	1	Screw	M8x35 - 8.8 ISO14581
2	HX 416	1	Pipe clip	
3	HX 007	1	Pipe clip	
4	EK 003	1	Washer	D8.4 ISO7089
5	EM 026	1	Nut	M8 DIN985
6	ES 470	1	Screw	M 8x45 ISO14581- 8.8
6	ES 297	1	Screw	M8x25 ISO14581 - 8.8
7	HX 611	2	Clip	L0058.2xB0039.1xS003.0
8	ES 414	1	Screw	M6x10 ISO4762 - 8.8
9	EK 043	1	Washer	D6.4 DIN134
10	EK 221	1	Pipe clip	D 12
10	EK 256	1	Pipe clip	D016
11	ES 105	2	Screw	M6x40 ISO4762 - 10.9
11	ES1568	1	Screw	M6x45 ISO4762 - 8.8
12	EK 190	2	Washer	D6 DIN134 - 06 - ST
13	HTR 810	1	Plate	L0093.0xB0015.0xS0003.3
14	EZ 124	1	Hose clip	D017x4.0
15	EM 014	1	Nut	M 6 DIN 985-8

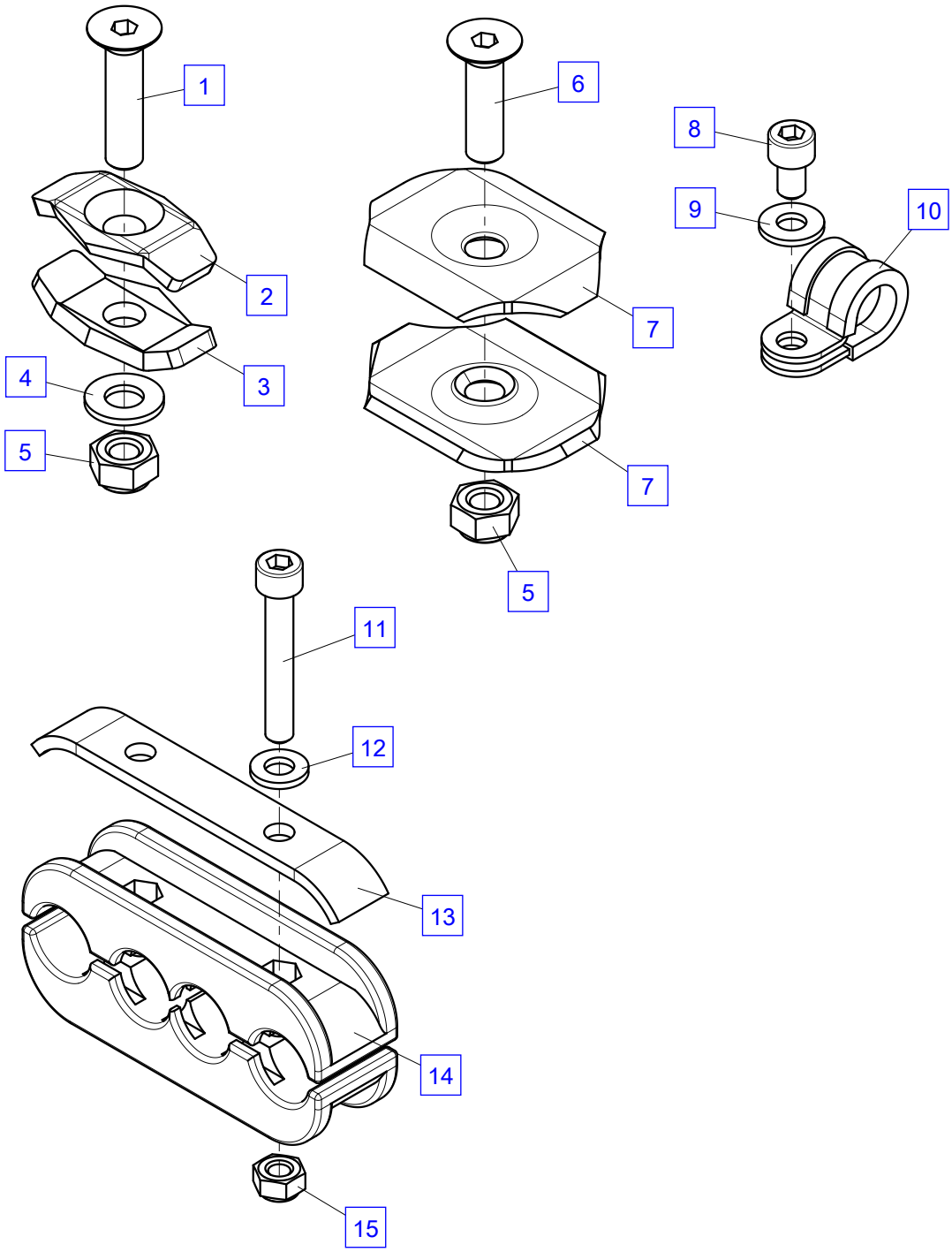
1
2
3
4
5
6
7
7
5
8
9
10
11
12
13
14
15

Decals

No.	Spare part	Qty.	Description	Dimension
2	EB3269	1	Decal	D 60 mm
3	EB1826	2	Symbol sign	
4	EB12007	1	Symbol sign	
5	EB15982	1	Decal Lubricant	"PALFINGER LUBRICANTS", 70x90 mm
6	EB13398	1	Decal	35x45 mm
7	EB12238	1	Decal	
8	EB12003	1	Warning sign	
9	EB12242	1	Symbol sign	
13	EB12881	1	Danger sign	105x90 mm
16	EB4039	2	Symbol sign	
17	EB14559	2	Symbol sign	

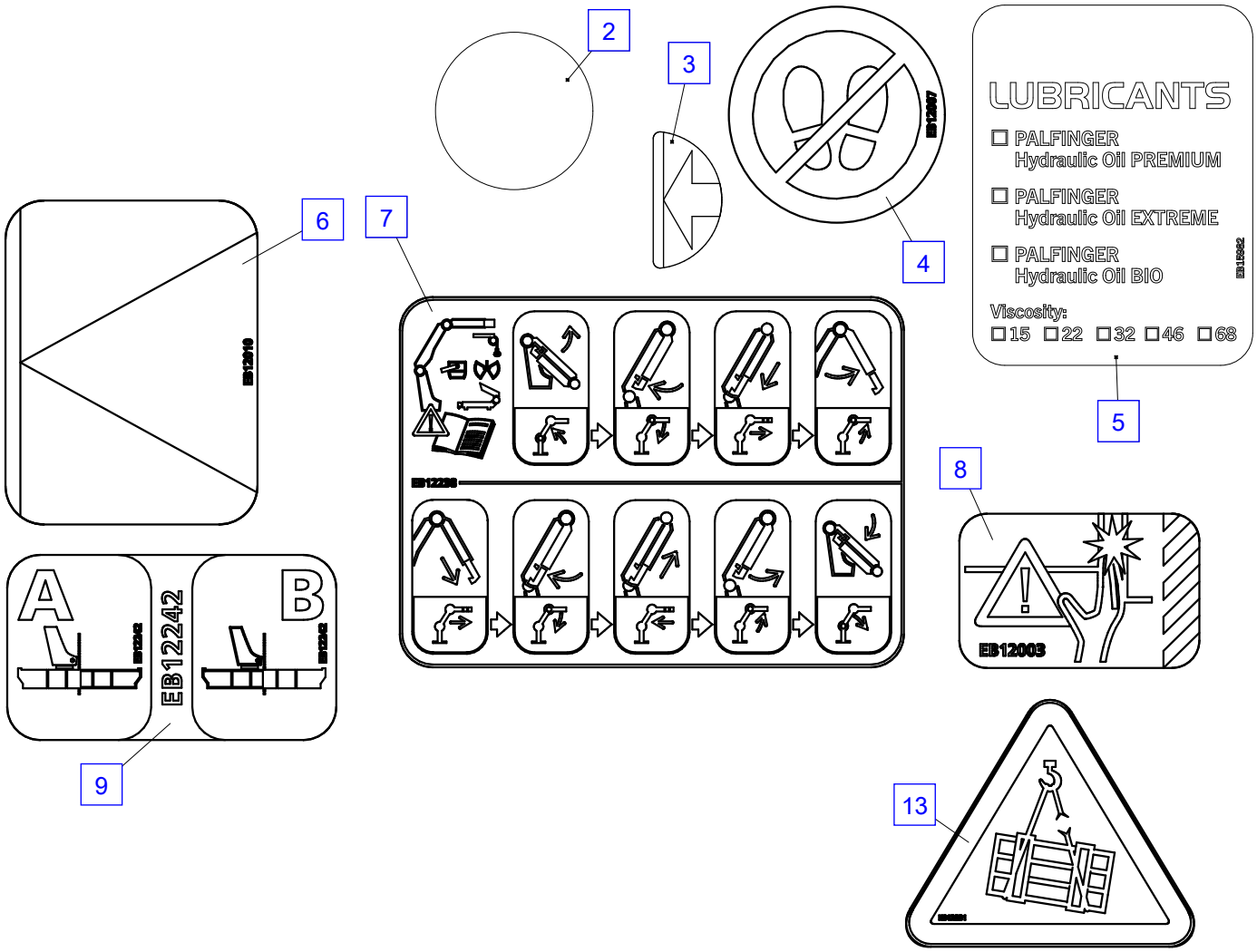
2
3
4
LUBRICANTS
PALFINGER
Hydraulic Oil PREMIUM
PALFINGER
Hydraulic Oil EXTREME
PALFINGER
Hydraulic Oil BIO
Viscosity:
15 22 32 46 68
5
6
7
8
A
B
EB12242
9
EB12003
13

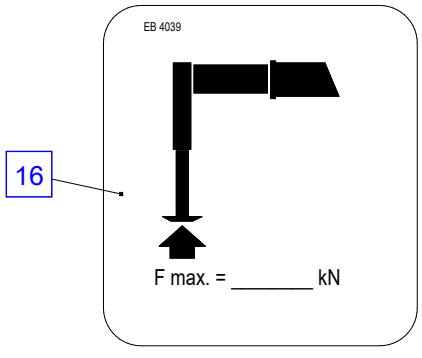
EB 4039
16
F max. = _____ kN

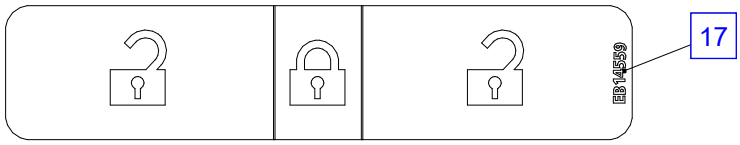
17
EB145559

Decals (PK 7.001K SLD 3)

No.	Spare part	Qty.	Description	Dimension
1	EB4855	2	Company decal Palfinger	415x87 mm
2	EB12746	2	Company decal PK 7.001K SLD 3	
3	EB12830	1	Capacity diagram	PK 7.001K SLD ()
4	EB12833	1	Capacity diagram	PK 7.001K SLD ()



1

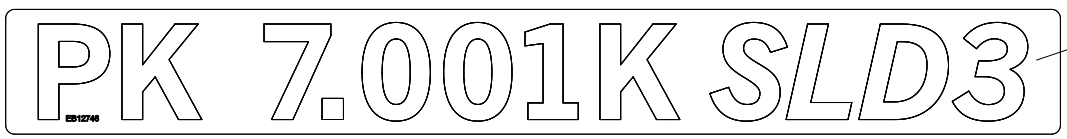

2

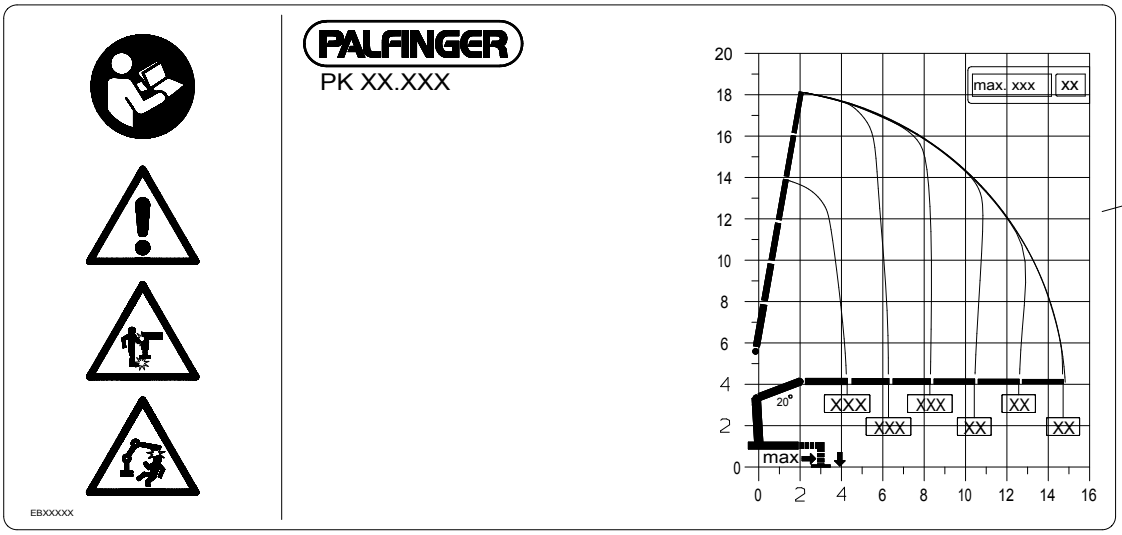

3

Symbol sign

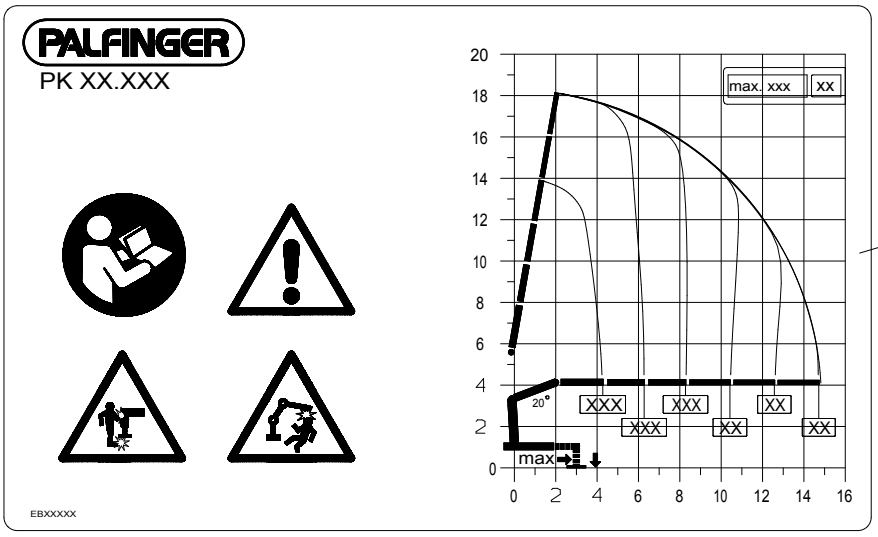

4

Service kit

No.	Spare part	Qty.	Description	Dimension
1	CKMP10001	1	Service kit	
2	EA5811	1	Filter element	80 l/min
3	EA4925	1	Filter element	
4	EZ8599	2	Lubricating grease	Excal VS2000


1
ORIGINAL
SPARE PARTS
SERVICE KIT
PALFINGER
PALFINGER GREASE
ESCAL VS 2000
PALFINGER GREASE
ESCAL VS 2000
PALFINGER
EA4925
2
3
4

Bracket FL

No.	Spare part	Qty.	Description	Dimension
1	HXE1130	1	Bracket	
2	ES 090	3	Screw	D 5x12
3	HXE 259	1	Bracket	
4	EM 026	3	Nut	M8 DIN985
5	ES 879	1	Screw	M 6x10 - 8.8 - DIN 7984
6	EK 003	1	Washer	D8.4 ISO7089
7	HXE1684	1	Bearer	
8	EM 224	2	Nut	
9	ES1154	2	Screw	M 8x60 ISO4762- 8.8
10	ES 374	1	Screw	M 8x12 ISO4762- 8.8
11	HXE 560	1	Bracket without lighting see page 1000.00111	
12	HT10270	1	Fastening plate	
13	HXE3555	1	Protection stirrup	
14	ES1658	3	Screw	M 6x12 8.8

Control system DN46

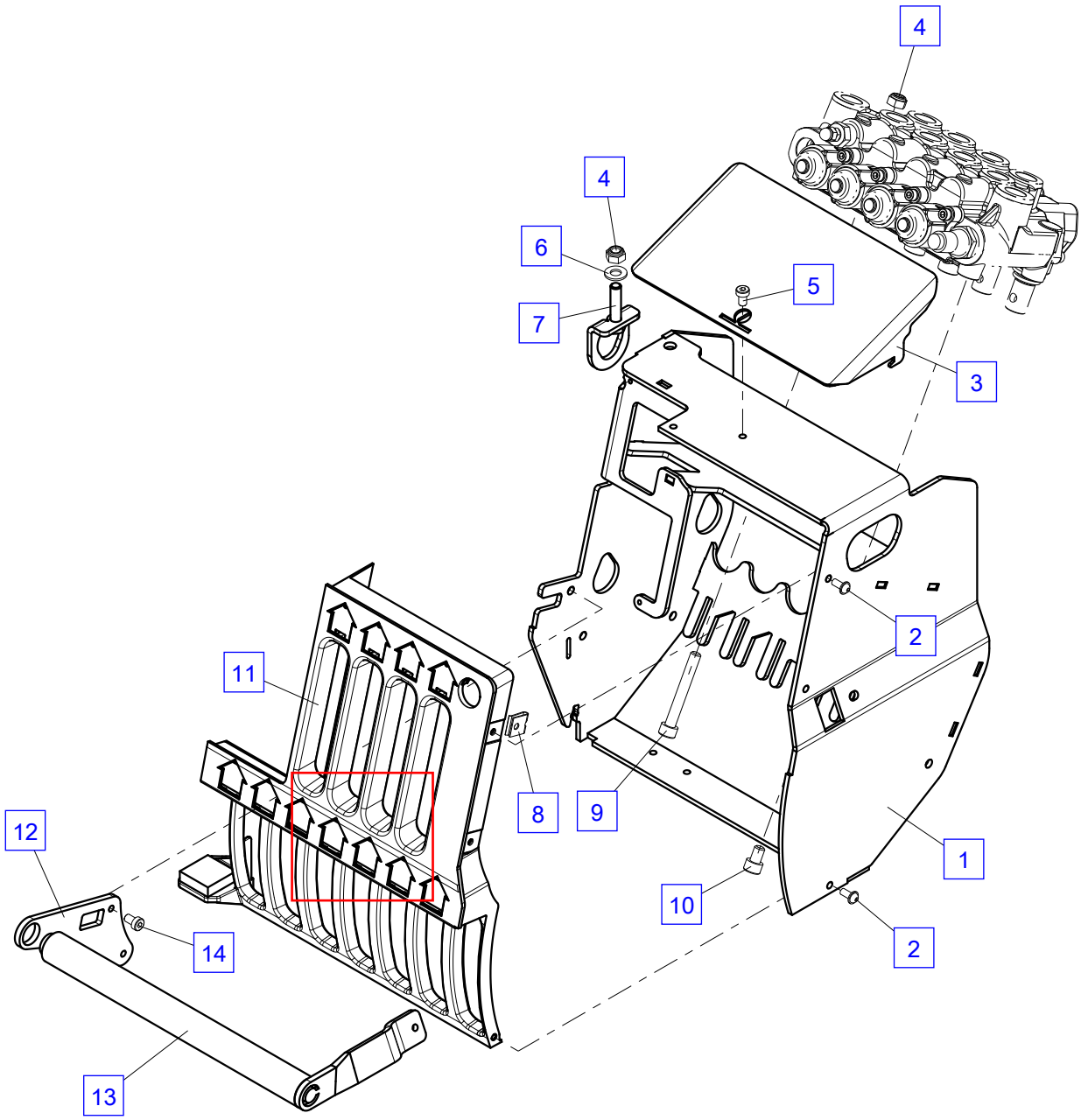

Bracket HXE 539,HXE 560

No.	Spare part	Qty.	Description	Dimension
3	EK1250	1	Inclinometer	
4	HX 031	1	Cover	
5	HXE 560	1	Bracket without lighting	
6	HX 073	1	Cover	
7	EZ1580	1	Blind plug	
8	EK 539	2	Cap	
9	EK 538	1	Cap	
10	EK 898	1	Control decal	
11	EK 517	1	Symbol sign	
12	EK 519	1	Symbol sign	
14	EK 540	1	Blind cover	

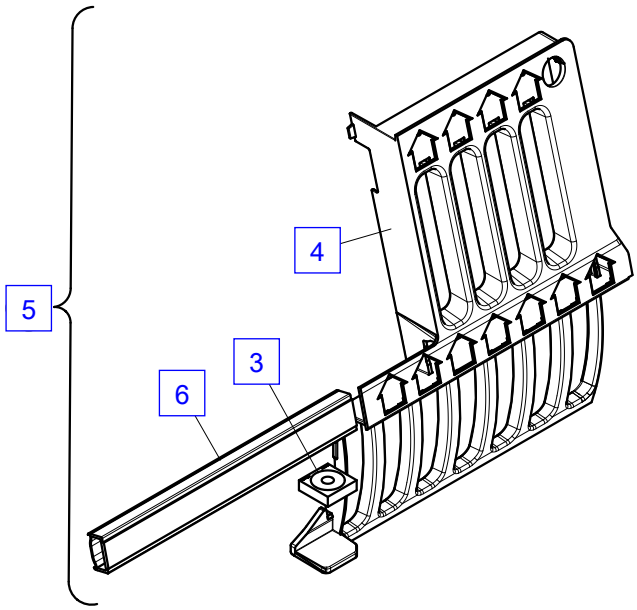
5
4
3
6

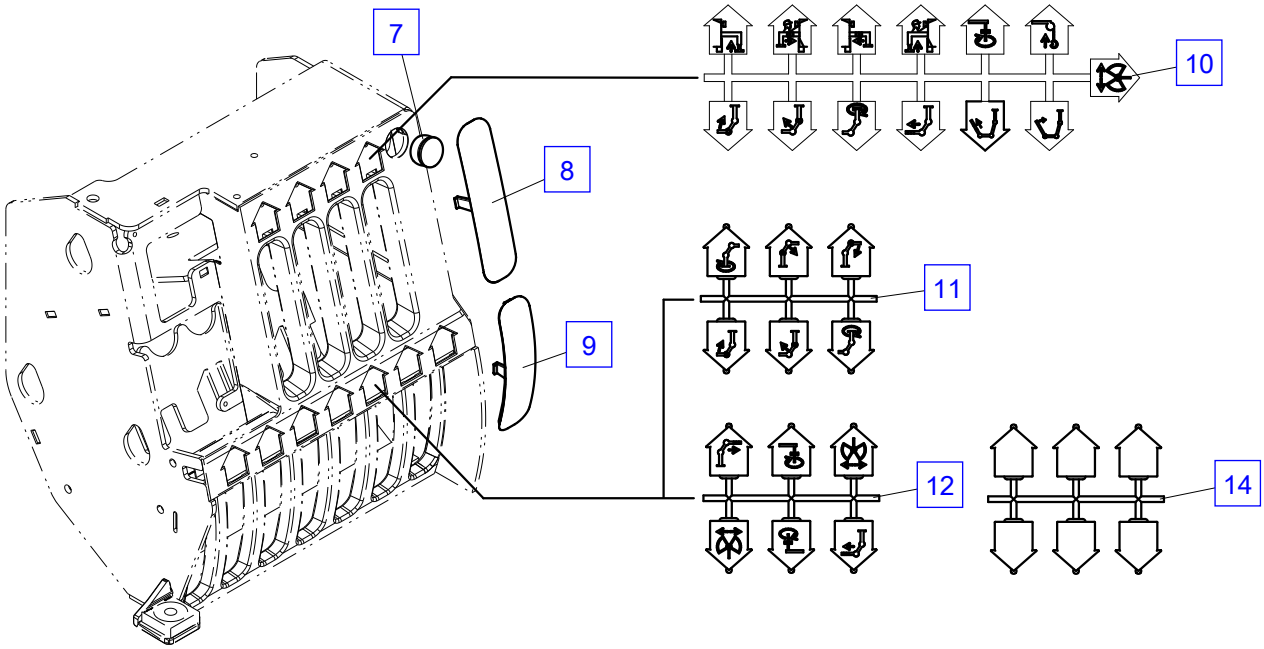
7
8
9
10
11
12
14

No.	Spare part	Qty.	Description	Dimension
1	ES 080	3	Screw	M 6x35 DIN 6912
2	EK 043	0	Washer	D6.4 DIN134
3	EM 014	0	Nut	M 6 DIN 985-8
4	HI2735	1	Control axle	
5	EK 379	0	Washer	D 21 DIN 1441
6	HH 513	0	Control lever	
7	EQ 116	0	Safety washer	D4 DIN6799
8	HI2603	0	Pin	
9	HSV 209	0	Control rod	
10	HH 520	0	Control lever	
11	ES 963	0	Screw	M 8x16 ISO7380

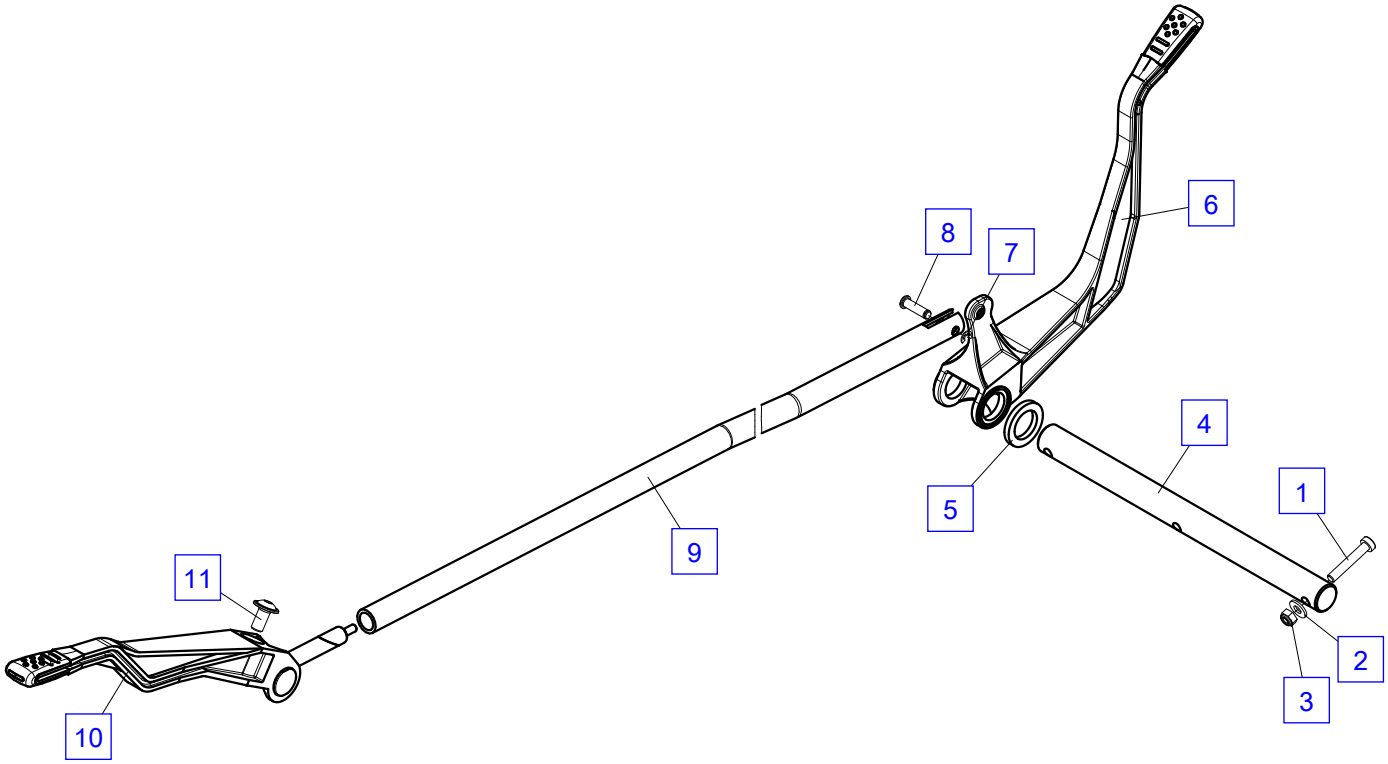
6
8
7
4
1
5
9
11
2
3
10

Control valve KSC00012A

No.	Spare part	Qty.	Description	Dimension
1	KSC00012A	1	Control valve (2-sections) see page 1010.02100A	
	EV4410	1	Control valve	VDM07
2	EA 769	1	Fitting	GE 16 SR 3/8"-ED
3	HLA 376	1	Fitting	GE 18L R3/8"-ED
4	EA 746	1	Locking screw	vsti M 18x1.5
5	EA 039	4	Fitting	GE 12S R3/8"-ED

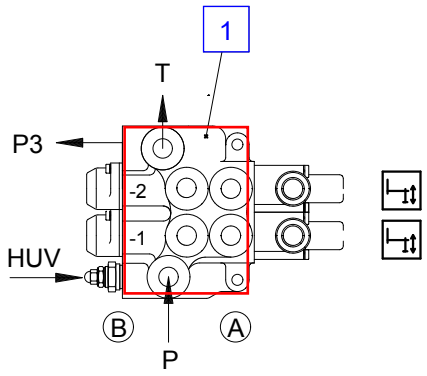

		Valve	Pressure/bar	Fitting	Restrictor	Lever	Element
P	P			2			
	-						
T	T			3			
	P3			4			
1	A			5			
	B			5			
2	A			5			
	B			5			

Control valve
KSC = with adaptors and valves
EV = KSC without adaptors and valves
HUV = Main relief valve
P,T = Supply connections
O = with overload protection
x = open center - spool must be ordered seperatly

Control valve - details

No.	Spare part	Qty.	Description	Dimension
1	EV5857	1	Main relief valve	
2	EZ9426	4	Spring housing, cpl.	
2	EZ3291	4	Spring housing, cpl.	
3	TD1605	4	Seal kit	
4	EZ3292	4	Lever support, cpl.	
5	EV1021	1	High pressure carry over port	M 18x1.5 - 3/8"

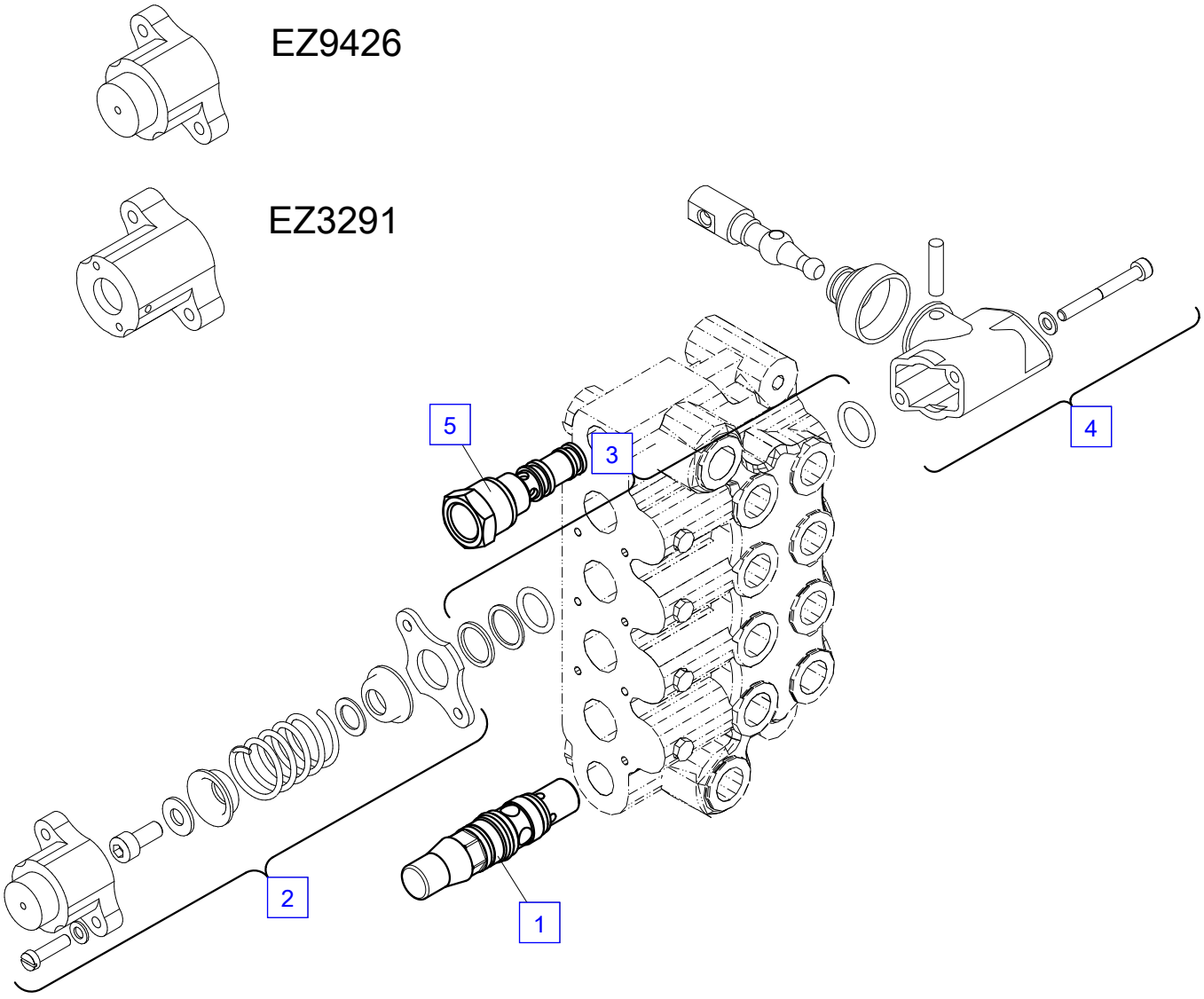
EZ9426
EZ3291
5
3
4
2
1

Valve bracket FL,I

No.	Spare part	Qty.	Description	Dimension
1	HXE1684	2	Bearer	
2	EK 003	2	Washer	D8.4 ISO7089
3	EM 026	1	Nut	M8 DIN985
4	HXE 258	1	Bracket	
5	HBS2786	2	Spacer	l=66 mm
6	ES1159	2	Screw	M 8x80 ISO4762- 8.8
7	ES1165	1	Screw	M 8x120 DIN 912
8	HBS2783	1	Spacer	l=101 mm
9	ES 175	1	Screw	M6x16 ISO4762 - 8.8
10	HXE 553	1	Bracket see page 1100.00101	
11	ES1150	2	Screw	M6x12 ISO4762 - 8.8

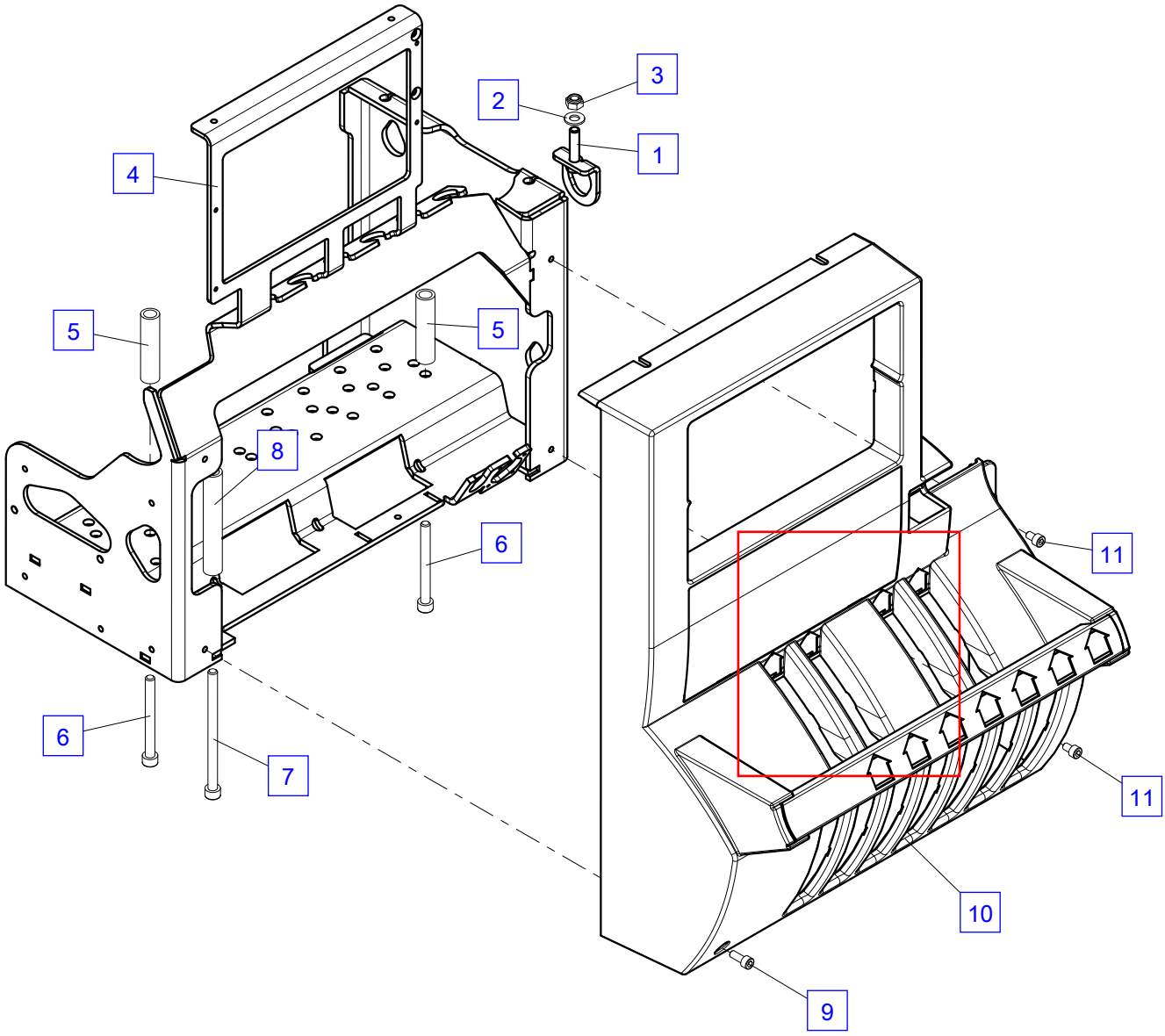
1
2
3
4
5
5
6
6
7
8
9
10
11
11

Valve bracket HXE 506,HXE 553

No.	Spare part	Qty.	Description	Dimension
2	EK 848	1	Mirror	
3	EK1250	1	Inclinometer	
5	HP 037	1	Protection stirrup	
6	ES 994	1	Screw	4.2x19 ISO7049
7	HX 001	1	Cover	
8	HXE 553	1	Bracket without lighting	
9	HX 057	1	Cover	
10	ES 962	3	Screw	D 3x25 mm
11	EF 174	3	Spring	
12	EK 535	1	Cover	
13	EK 537	2	Cap	
14	EK 536	1	Cap	
15	EK 898	1	Control decal	
16	EK 517	1	Symbol sign	
17	EK 519	1	Symbol sign	
19	EK 540	1	Blind cover	

Valve bracket HXE 506,HXE 553

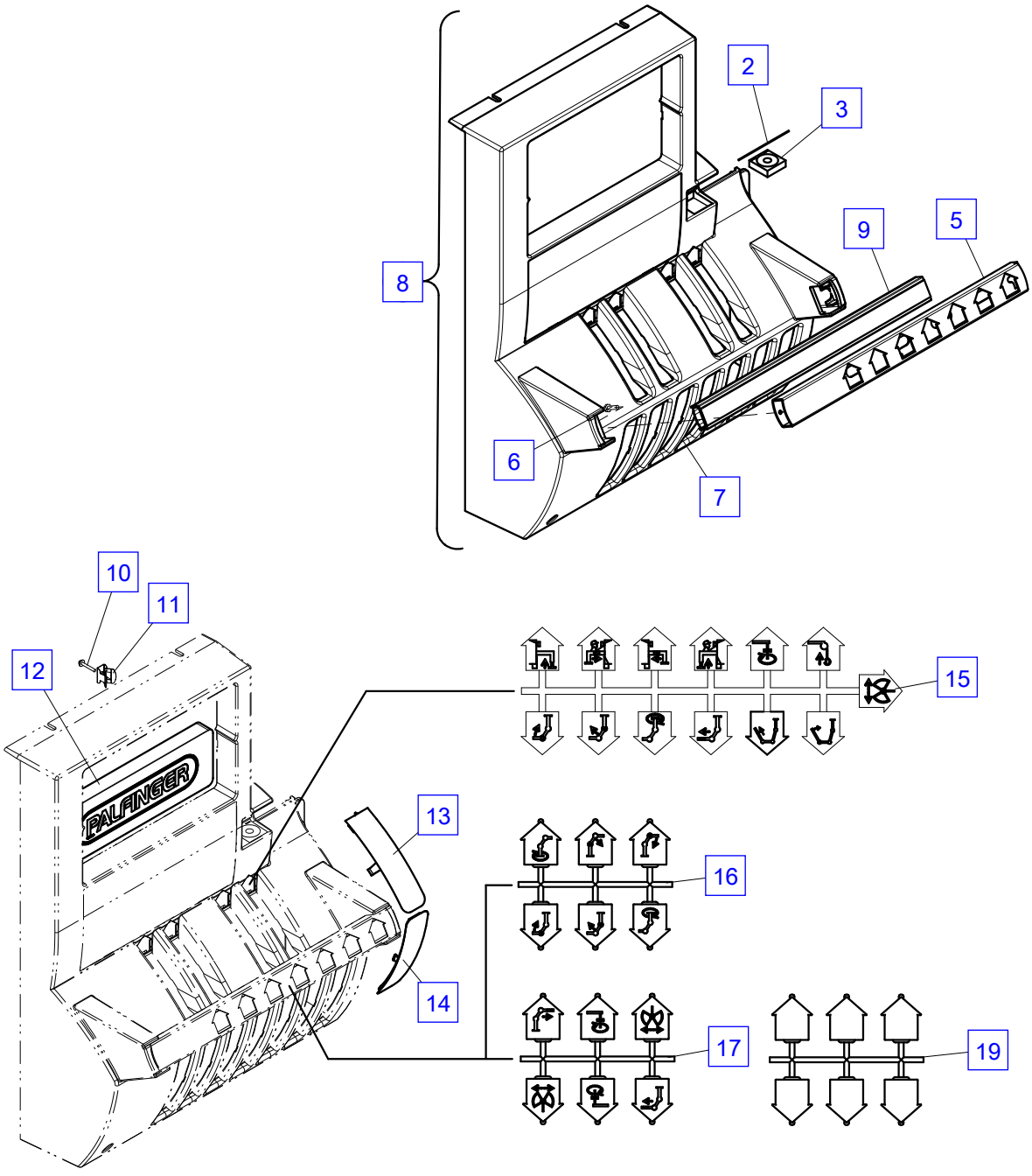

Control system

No.	Spare part	Qty.	Description	Dimension
1	ES 265	2	Screw	M8x20 ISO4762 - 8.8
2	EK 003	2	Washer	D8.4 ISO7089
3	HI 827	1	Control axle	
4	HH 507	1	Control lever, blue	
4	HH 509	0	Control lever, yellow	
5	HSV 210	0	Control rod	
6	HI2603	0	Pin	
7	EQ 116	0	Safety washer	D4 DIN6799
8	HH 511	0	Control lever, yellow	
8	HH 515	1	Control lever, blue	

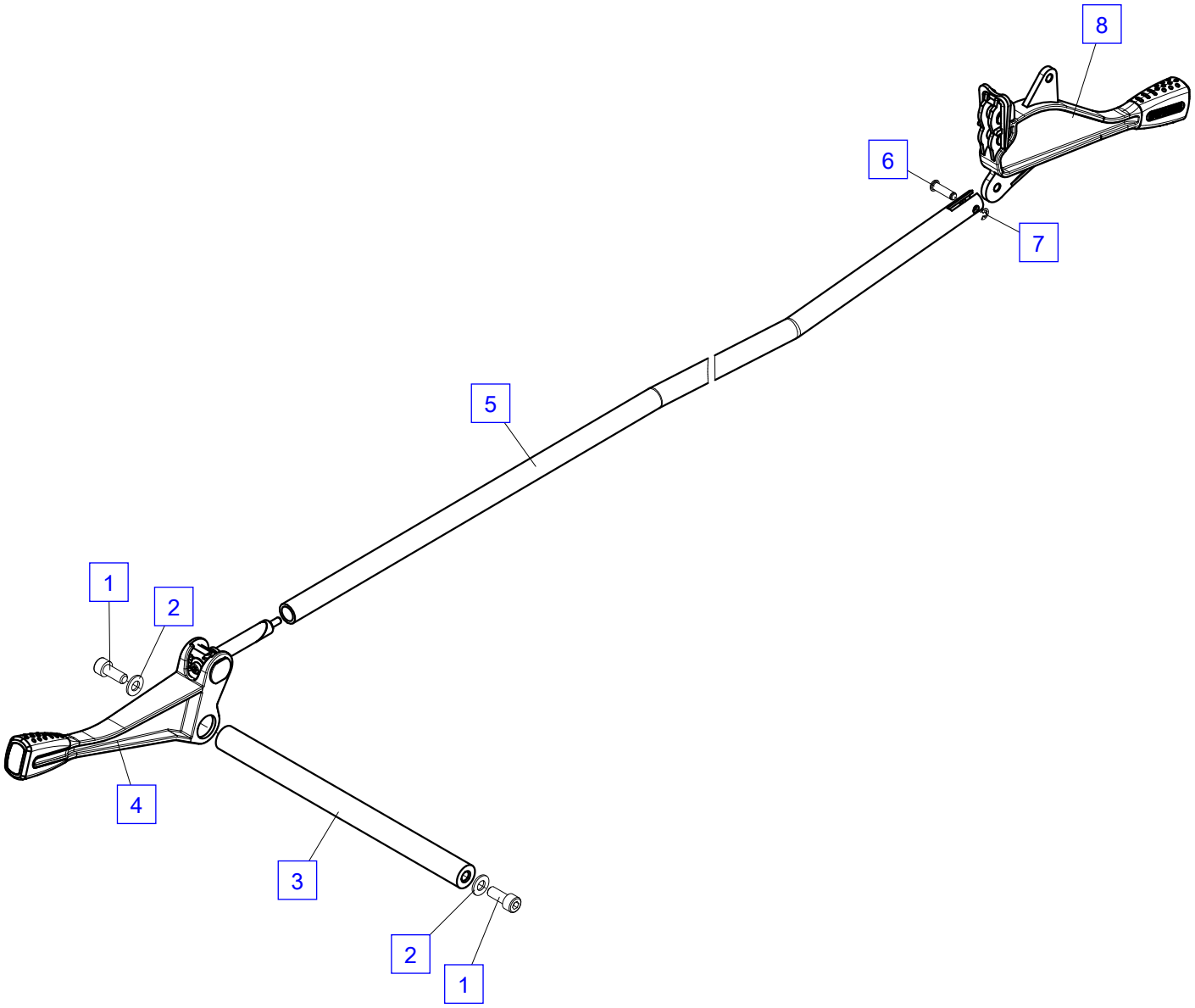
8
6
7
5
1
2
4
3
2
1

Control valve KSC01158A

No.	Spare part	Qty.	Description	Dimension
	KSC01158A	1	Control valve (7-sections) see page 1100.0...	
1	EA 074	1	Fitting	GE 16S R1/2"-ED
2	EA 089	1	Fitting	GE 08S R1/4"-ED
3	EA 074	1	Fitting	GE 16S R1/2"-ED
4	EA 240	1	Fitting	GE 18 L R1/2"
5	EA 240	1	Fitting	GE 18 L R1/2"
6	HLA1164	2	Fitting with choke	
	EA 590	2	Fitting	GE 12 SR 1/2"ED
	EF 008	2	Spring	D 11x0.8x22
	HLA 372	2	Fitting	
	HD 376	2	Restrictor	D 1,5 mm
7	EV8163	0	Control valve element	S31A
8	EA 183	0	Fitting	GE 12S R1/2"-ED
9	EV8164	2	Control valve element	S31B

		Valve	Fitting	Restrictor	Lever	Element
HUV						
P	P1		1			
	PM		2			
T	T1		3			
	T3		4			
	T4		5			

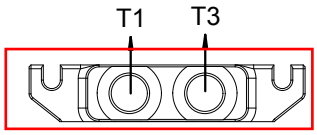

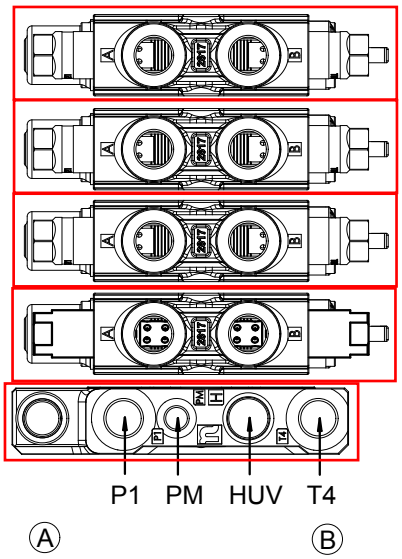

4	A B		8			9
3	A B		8			9
2	A B		8			7
1	A B		6			7

Control valve
- KSC = with adaptors and valves
- EV = KSC without adaptors and valves
- HUV = Main relief valve
- P,T = Supply connections
- O = with overload protection
- x = open center - spool must be ordered seperatly

Inlet element

No.	Spare part	Qty.	Description	Dimension
1	EV7392	1	Inlet element	
2	EV5118	1	Main relief valve	35-350 bar
3	EV4615	1	Solenoid valve	
	TD 239	1	Seal kit	
4	EV4710	1	Magnet coil d=13 mm	26V
5	HLA1123	1	Protecting cap	
7	EV4615B	1	Solenoid valve	
8	EEA15740	1	Magnet coil d=16 mm	24 V
9	EV8790	1	Protecting cap	

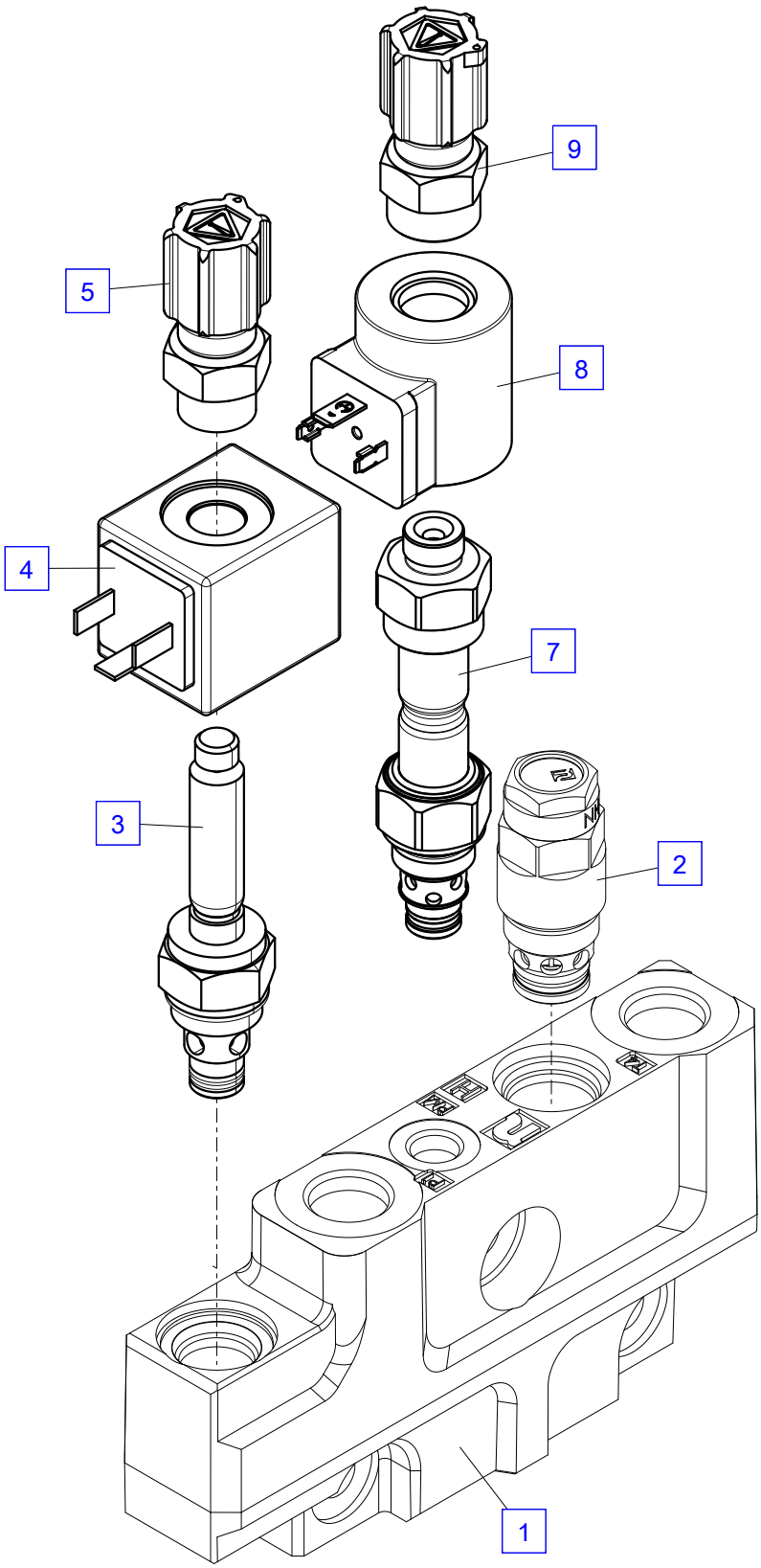
9
5
8
4
7
3
2
1

Slewing system

No.	Spare part	Qty.	Description	Dimension
1	EV8163	1	Control valve element	S31A
2	EV7585	2	Check valve	
3	EV4462	1	Lever bearing	
4	EV 043/210	2	Relief pressure valve w/ anti cavication valve	210 bar
5	TD 050	1	Seal kit	
6	EV6161	1	Spool	13SZH
8	EV7469	1	Spool position control	

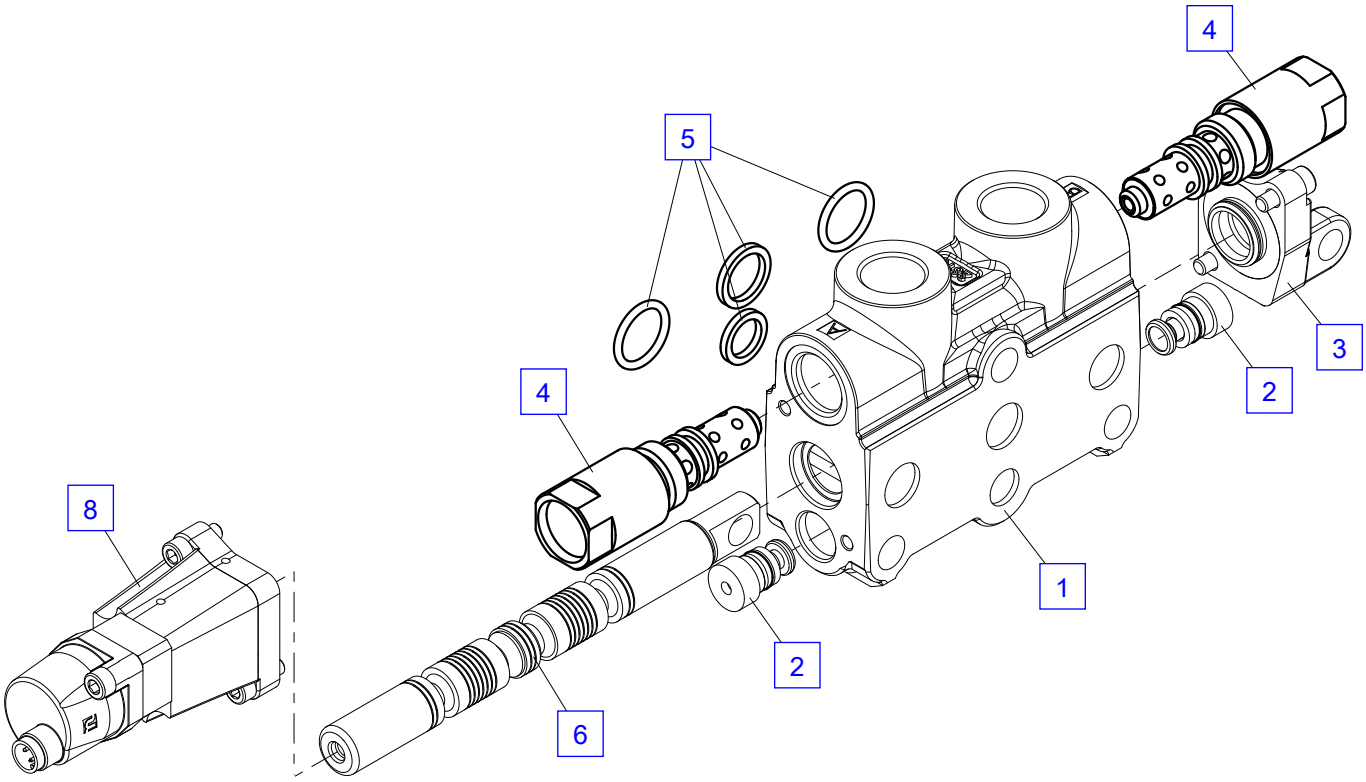
4
5
4
3
2
8
1
2
6

Main boom

No.	Spare part	Qty.	Description	Dimension
1	EV8163	1	Control valve element	S31A
2	EV7585	2	Check valve	
3	EV4462	1	Lever bearing	
4	EV 044/120	1	Pressure relief valve	120 bar
5	TD 050	1	Seal kit	
6	EV 044/345	1	Pressure relief valve	345 bar
7	EV5633	1	Control spool for overload protection	13ABH
9	EV7371	1	Spool position control	

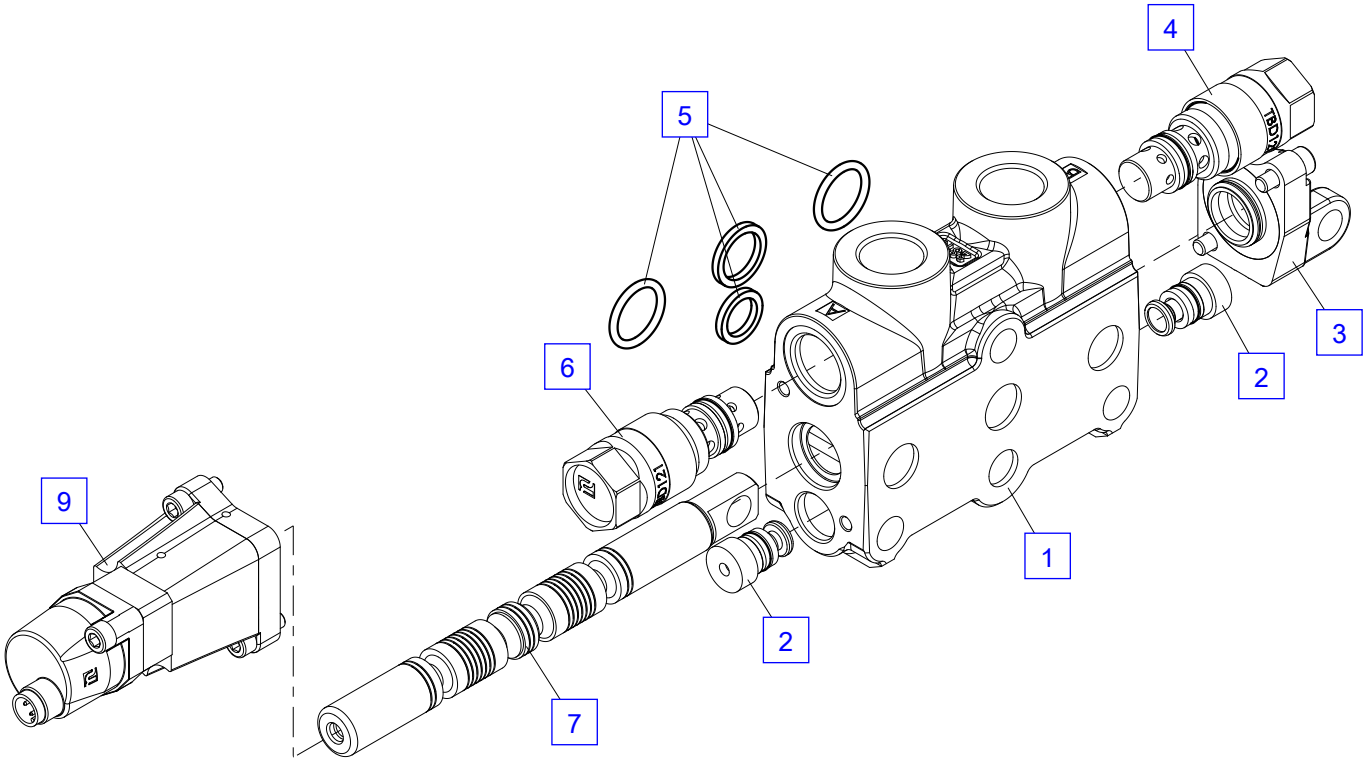
4
5
3
6
2
9
1
2
7

Outer boom

No.	Spare part	Qty.	Description	Dimension
1	EV8164	1	Control valve element	S31B
2	EV7585	2	Check valve	
3	EV4462	1	Lever bearing	
4	TD 050	1	Seal kit	
5	EV6002	1	Control spool	13XBH

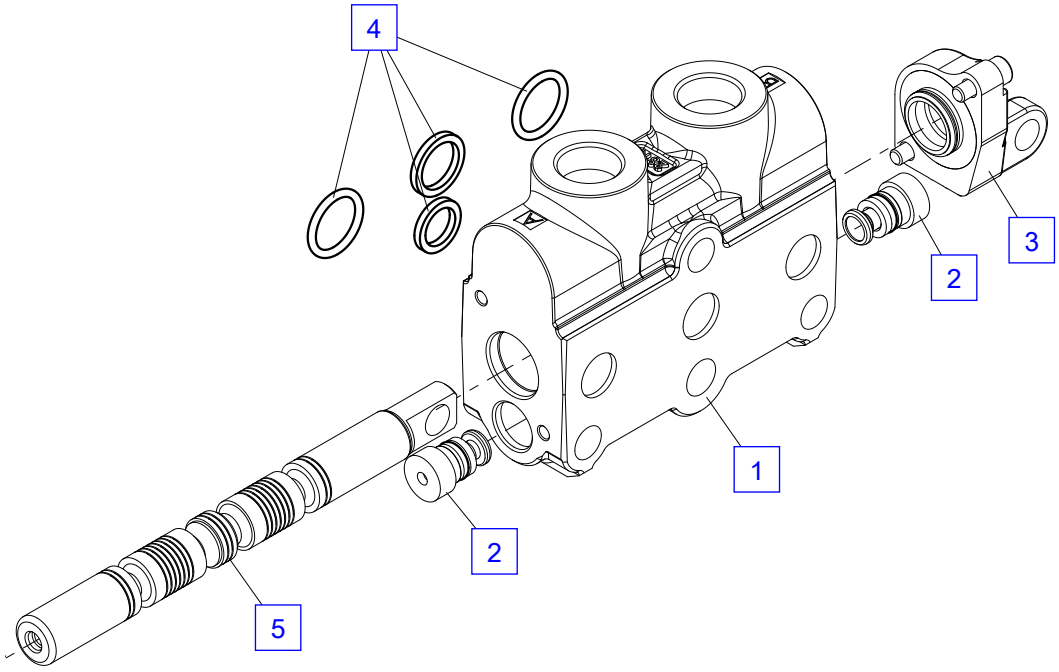
4
3
2
1
2
5

Boom extension

No.	Spare part	Qty.	Description	Dimension
1	EV8164	1	Control valve element	S31B
2	EV7585	2	Check valve	
3	EV4462	1	Lever bearing	
4	TD 050	1	Seal kit	
5	EV5635	1	Control spool	13ZAH
7	EV7371	1	Spool position control	

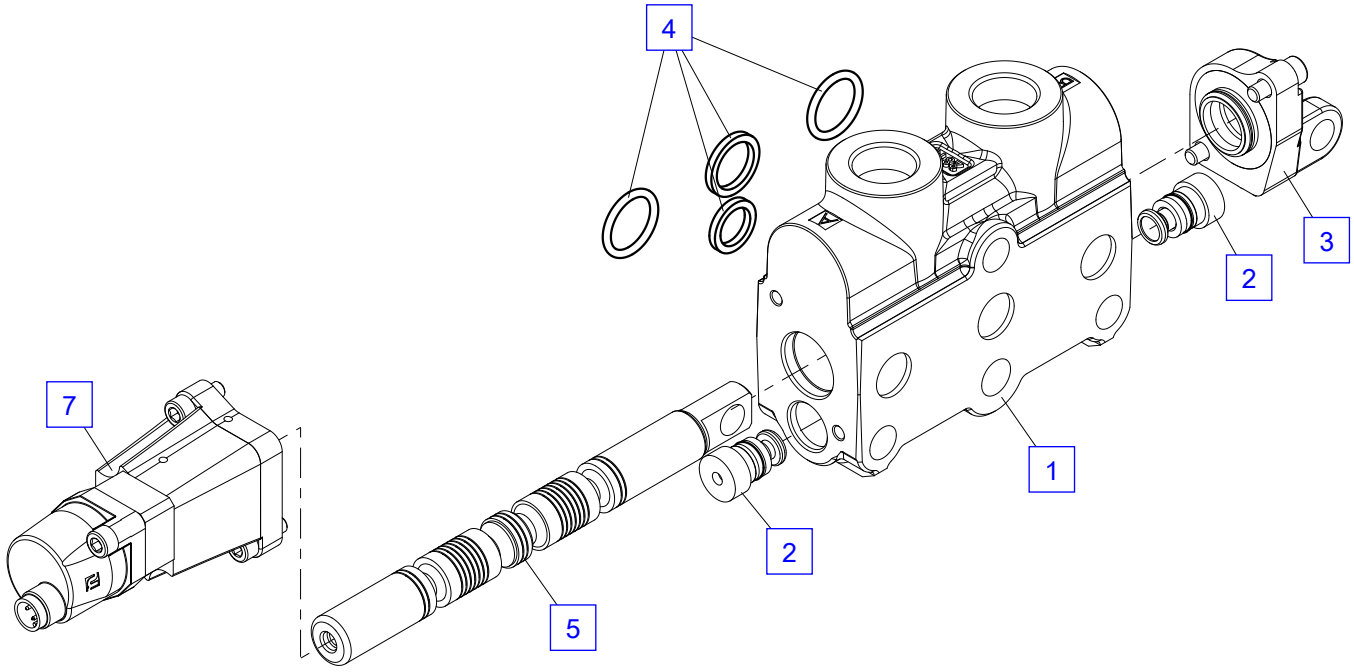
4
3
2
7
1
2
5

End element

No.	Spare part	Qty.	Description	Dimension
1	EV 472	1	End cover	
3	ES2722	1	Anchor bolt, cpl. (4-elements)	

End element

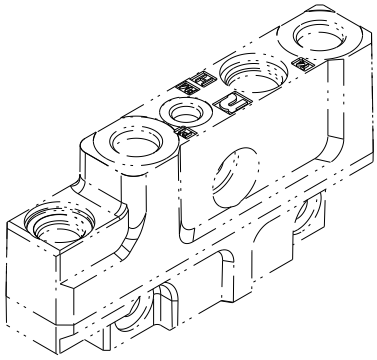

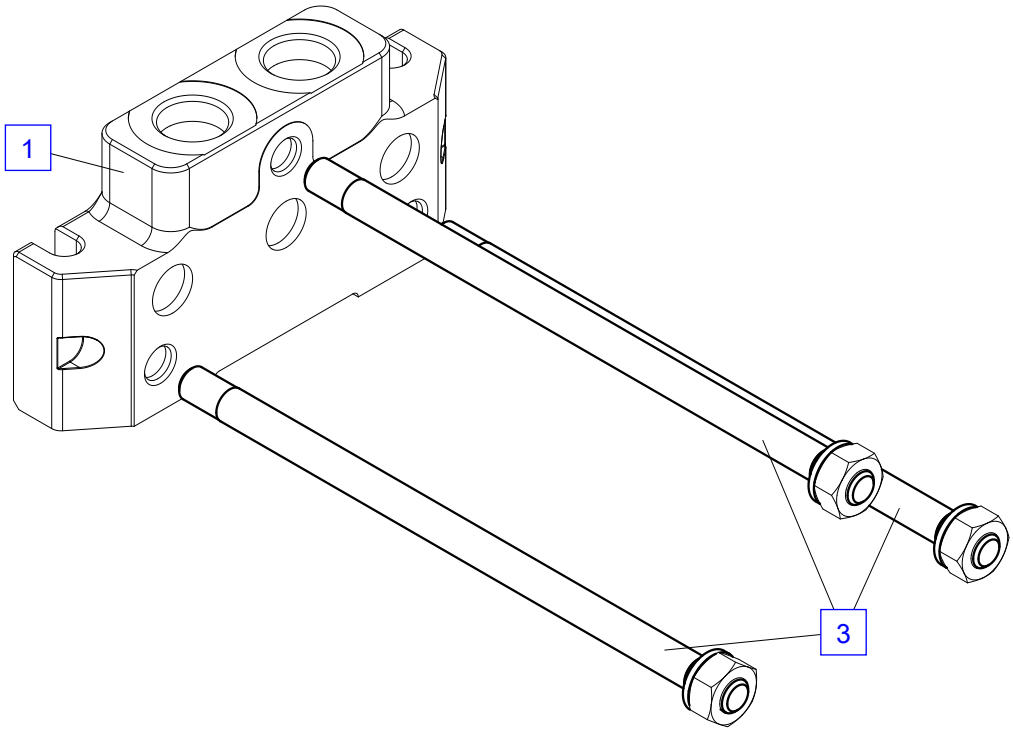

End element ISC

No.	Spare part	Qty.	Description	Dimension
1	EV7636	1	End element	ISC
2	EV7642-24V	1	Solenoid valve 24V	24V
	EV7765	1	Solenoid	24 V
3	EK3468	1	Sealing cap	
4	ES2722	1	Anchor bolt, cpl. (4-elements)	

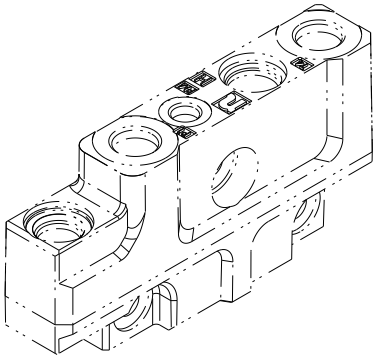

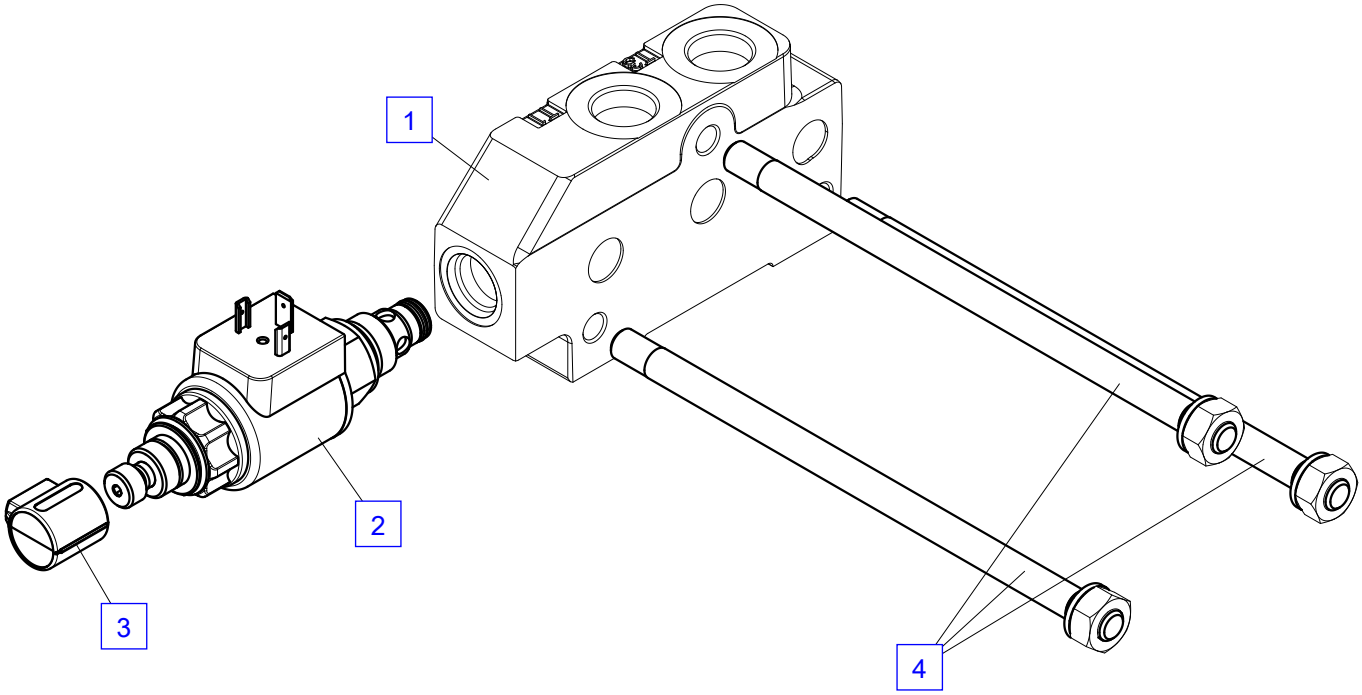
1
2
3
4

Support STZY3 R1,R2

No.	Spare part	Qty.	Description	Dimension
1	UP1551A	1	Stabilizer ram see page 1111.01311	
2	ES1181	2	Screw	M12x40 ISO4762 - 8.8
3	HA6446	1	Stirrup	
4	HXE1711A	1	Stabilizer support	
5	EK 207	10	Washer	D13 ISO7089
6	ES 041	10	Screw	M12x25 ISO4762 - 10.9
7	EA 039	3	Fitting	GE 12S R3/8"-ED
8	EV4109B	1	Check valve see page 1111.02000	
9	HLR17541	1	Pipe	D 12

Stabilizer ram # 100679684 1111.01300

Support STZY3 R1,R2

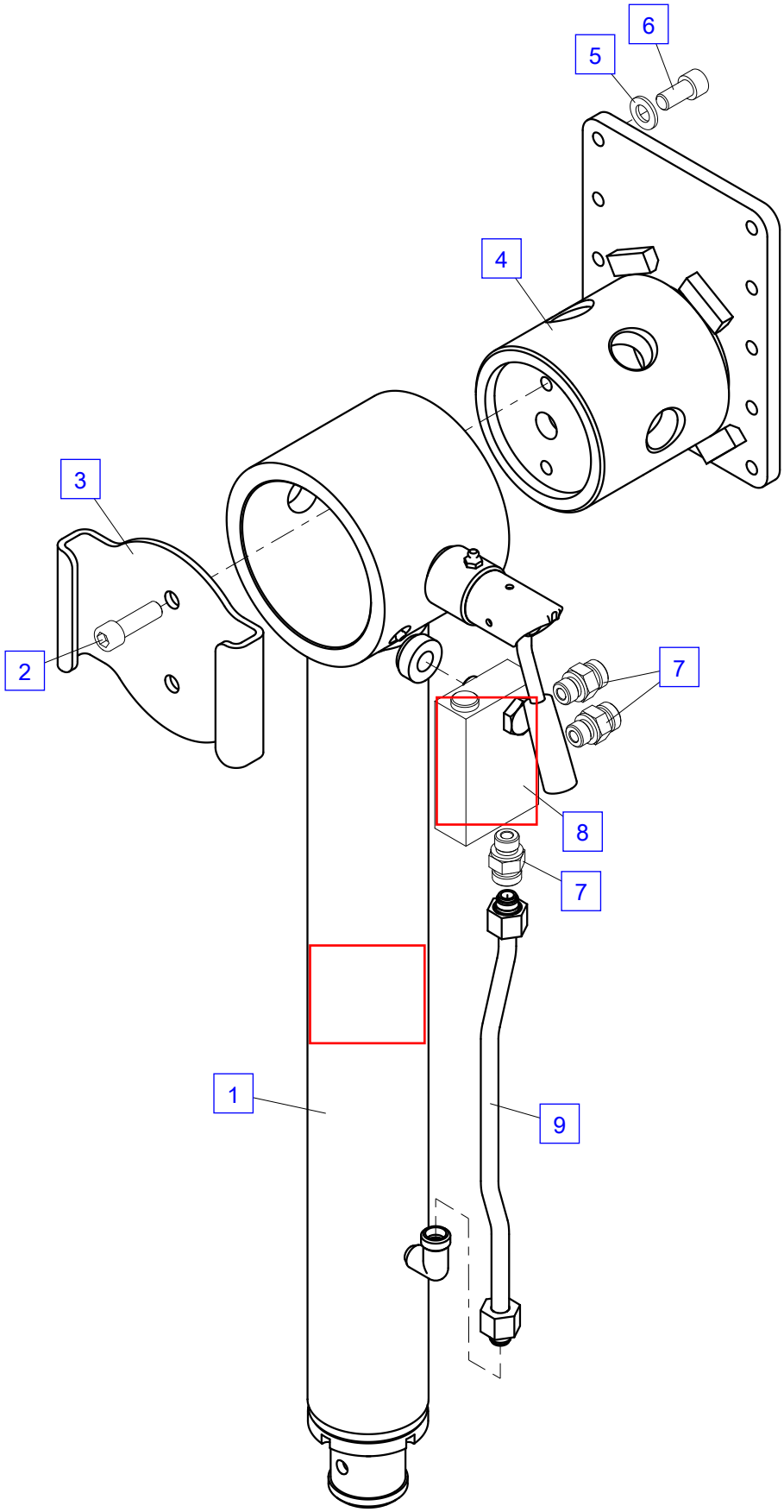

Stabilizer ram UP1551A

No.	Spare part	Qty.	Description	Dimension
	UP1551A	1	Stabilizer ram	
1	HY1414	1	Cylinder tube	
2	EA 005	3	Grease nipple	M10x1 DIN71412
3	EZ6638	1	Hand lever	
4	EQ 299	1	Adapter sleeve	D4x18 DIN1481
5	HX 463	1	Bushing	
6	EF 061	1	Pressure spring	D 24.2.5x60
7	HI2738	1	Pin	
8	TD 572B	1	Seal kit	
9	HSK 369B	1	Piston rod	
10	HV 372A	1	Cylinder nut	

Stabilizer ram # 100679684 1111.01311

Stabilizer ram UP1551A

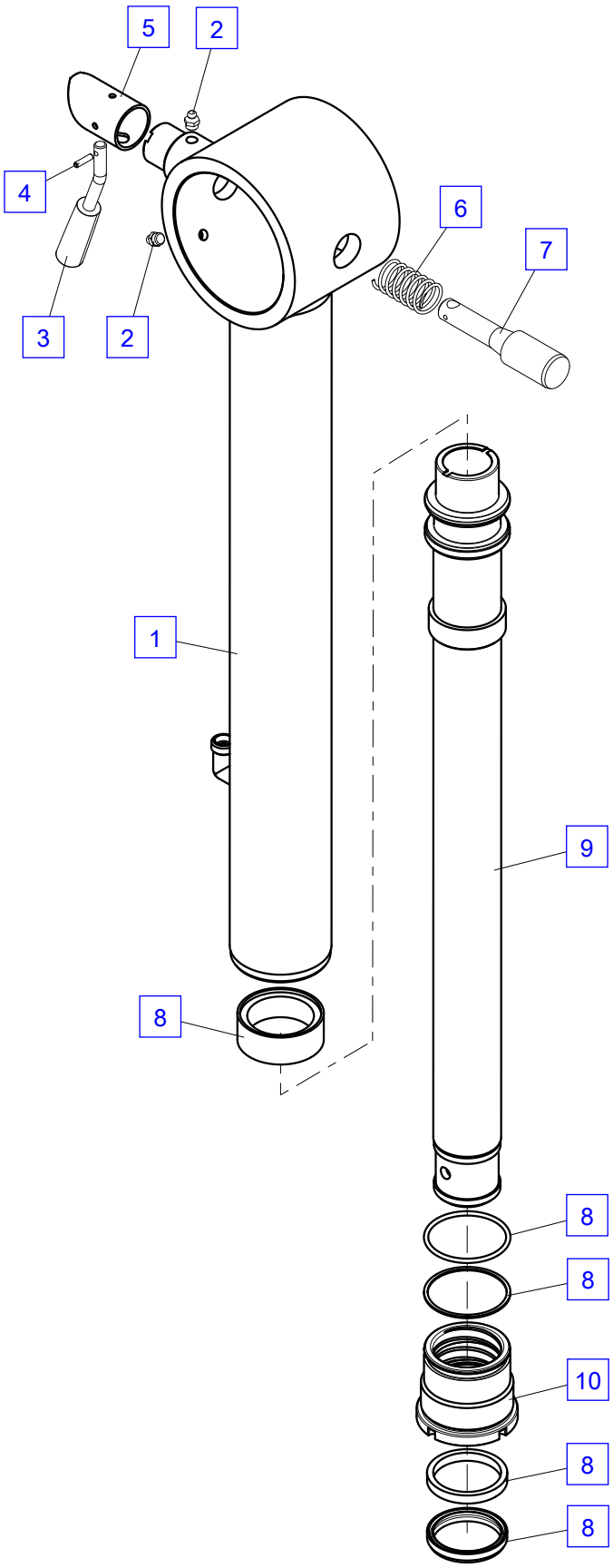

Check valve EV4109B

No.	Spare part	Qty.	Description	Dimension
	EV4109B	1	Check valve	
1	EA5792	1	Banjo bolt	
2	ED 620	1	Sealing ring	KD 3/8"
3	EV 867	1	Valve	
	TD 264	1	Seal kit	

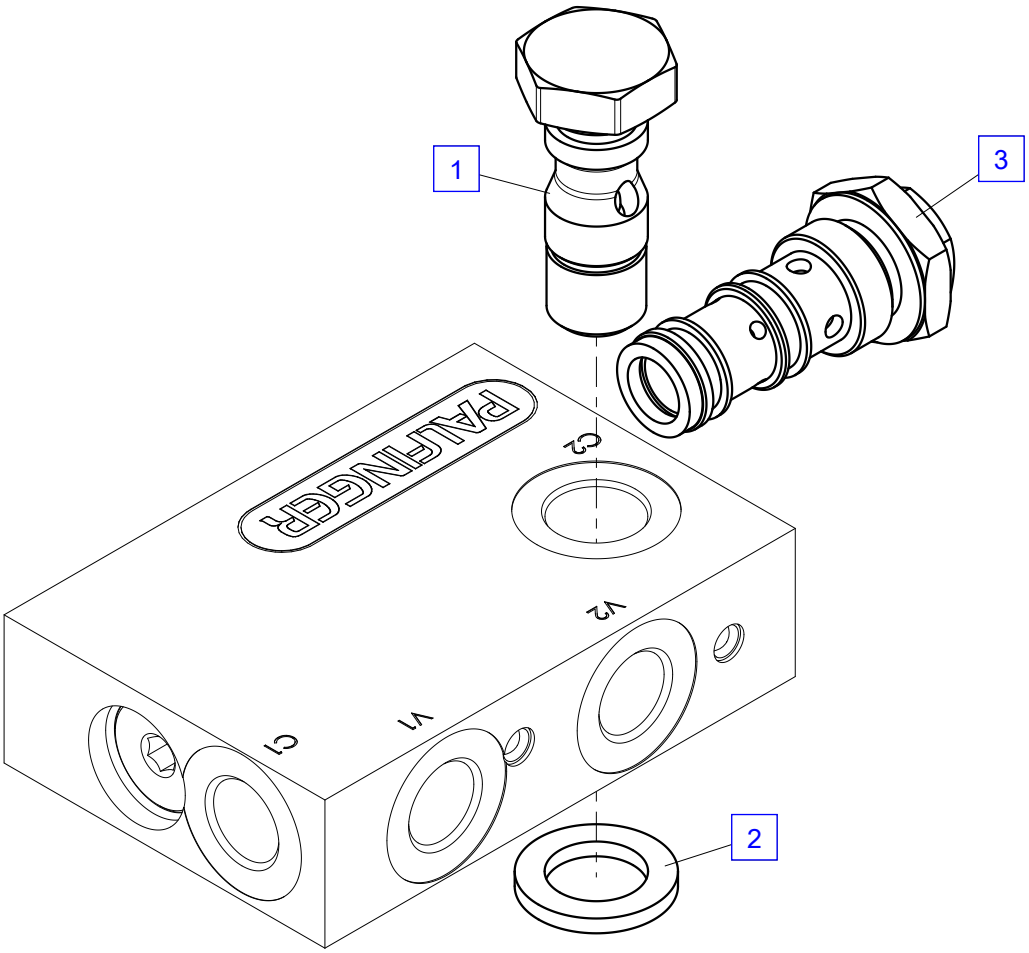
1
3
C2
V2
C1
V1
2

Stabilizer plates

No.	Spare part	Qty.	Description	Dimension
1	EA 412	1	Grease nipple	M 6x1 H1 71412
2	HXE3490	1	Stabilizer plates	
3	HBS3311	1	Bearing bush	
4	HBS3310	1	Cover	
5	ES 344	4	Screw	M 6x20 DIN 933

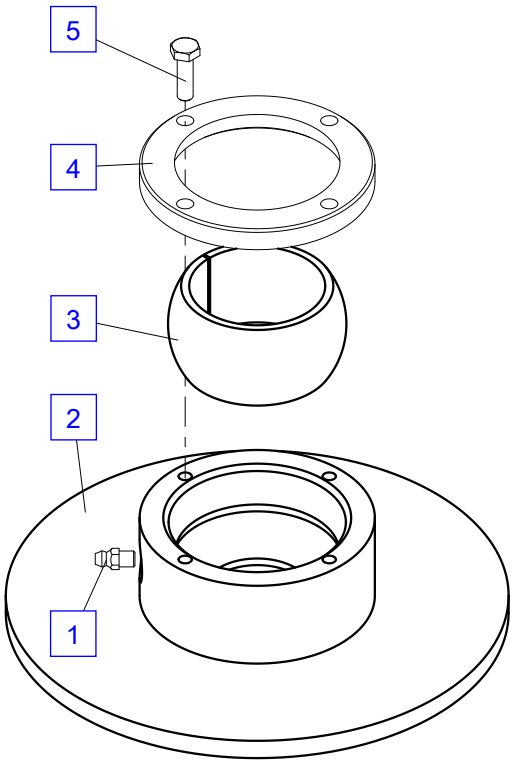
5
4
3
2
1

U-bolt kit UZ347 BRI-3B

No.	Spare part	Qty.	Description	Dimension
	UZ347S	0	U-bolt kit	
1	EK 856	1	Bolt protection cap	H=54,8 mm
2	EM 049	4	Nut	M 30x1,5 DIN 934
3	HX6183	1	Mounting washer plate	h=26 mm
4	HIG1031	1	Mounting bolt coated	M 30x1.5x1000
5	EK2649	1	Washer	Ø 30 ISO7089
6	HXE3145	1	U-bolt sleeve	
7	EK3251	2	Bolt protection cap	H=55 mm
8	EM 048	8	Nut	M 24x1,5 ISO8673-10
9	HX6181	2	Mounting washer plate	
10	HIG1033	2	Mounting bolt	M 24x1.5x1000
11	EK2648	2	Washer	Ø 25 ISO7089
12	HXE3144	2	U-bolt sleeve	
13	HT7940	2	Stop	80x40x20
14	HT7941	2	Stop	64x61x20

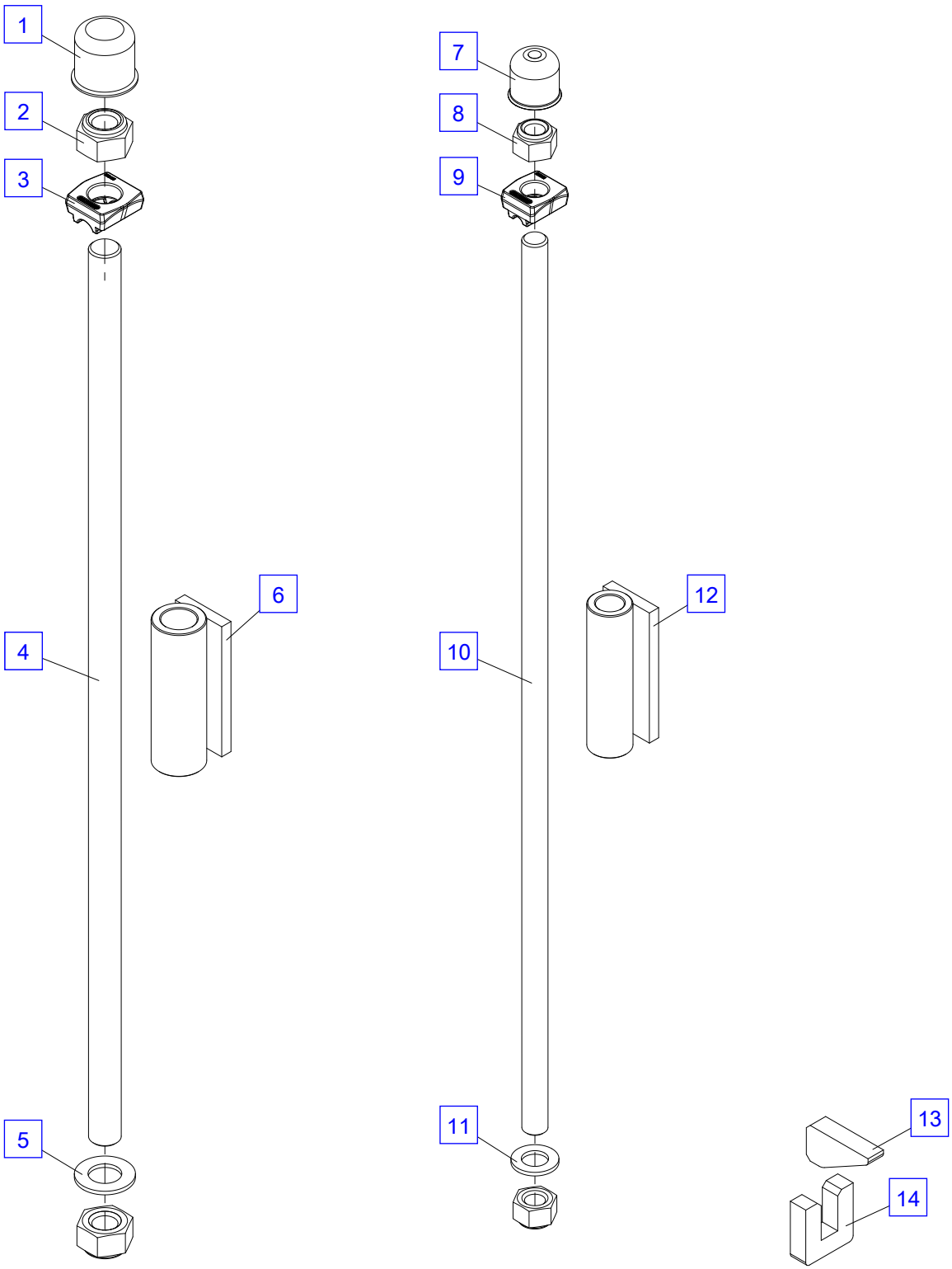
1
2
3
4
5
6
7
8
9
10
11
12
13
14

Oil tank UT084A

No.	Spare part	Qty.	Description	Dimension
	UT084A	1	Oil tank, cpl. 50l	50l
1	UT084-02	1	Tank	50l
2	EA1411A	1	Return filter, cpl. see page 1211.02000	80 l/min
3	HA6805	1	Protection stirrup	
4	EK 003	2	Washer	D8.4 ISO7089
5	ES 011	2	Screw	M 8x30 ISO4762-10.9
6	EA 442	1	Locking screw	VSTI R3/8"
7	EA 027A	1	Oil gauge	
8	EZ4803	1	Plug	G 1 1/4"
9	EA 369	1	Locking screw	VSTI R 1/1"

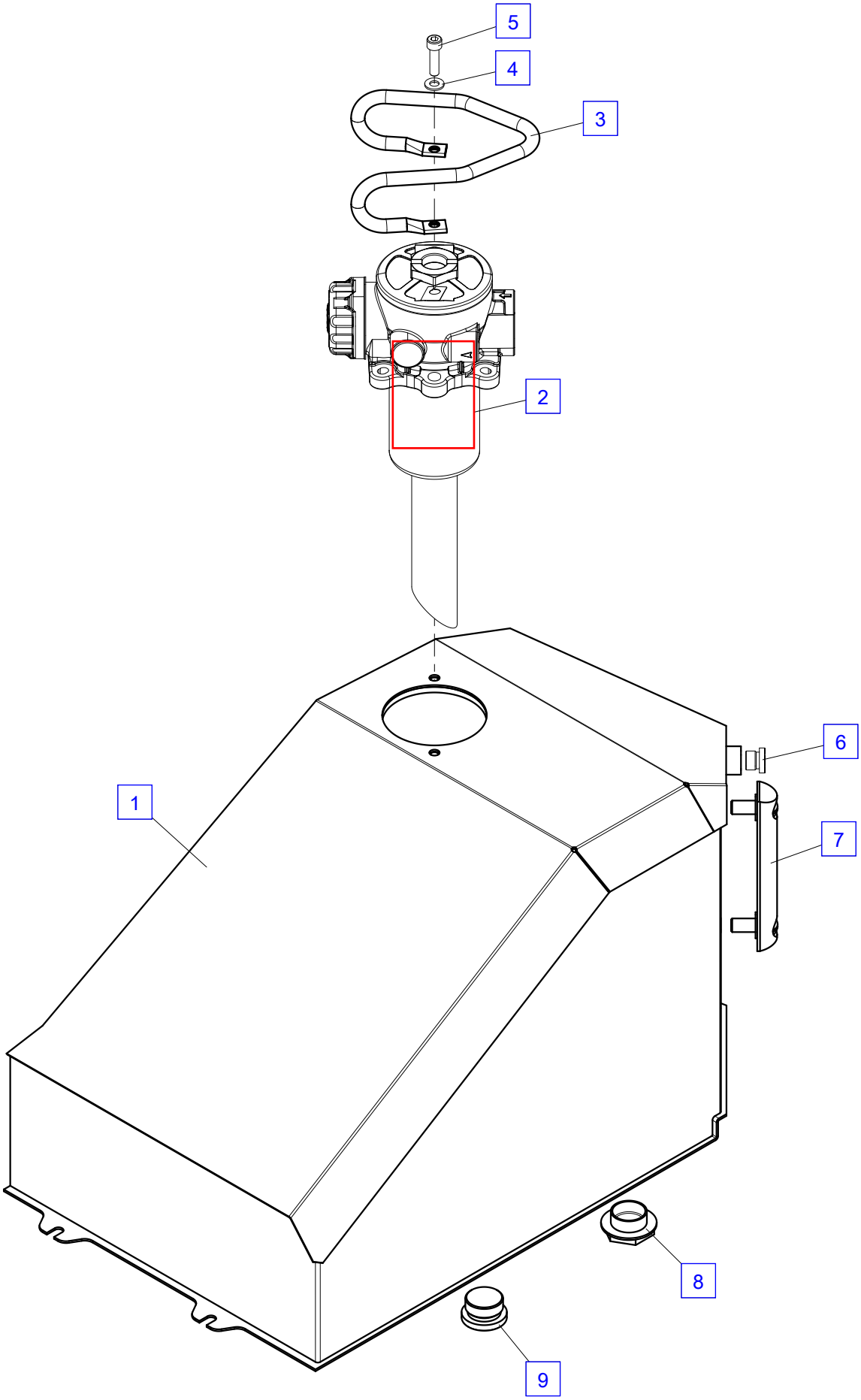
5
4
3
2
6
1
7
8
9

Return oil filter

No.	Spare part	Qty.	Description	Dimension
1	EA1411A	1	Return filter, cpl.	80 l/min
2	EK 003	4	Washer	D8.4 ISO7089
3	ES 006	4	Screw	M8x25 ISO4762 - 10.9
4	EA1528	1	Filter cover	
5	EA5811	1	Filter element	80 l/min
6	EZ6006	1	Cap + filter	
7	TD1776	1	Seal kit	

See spare part information P-EC-1401

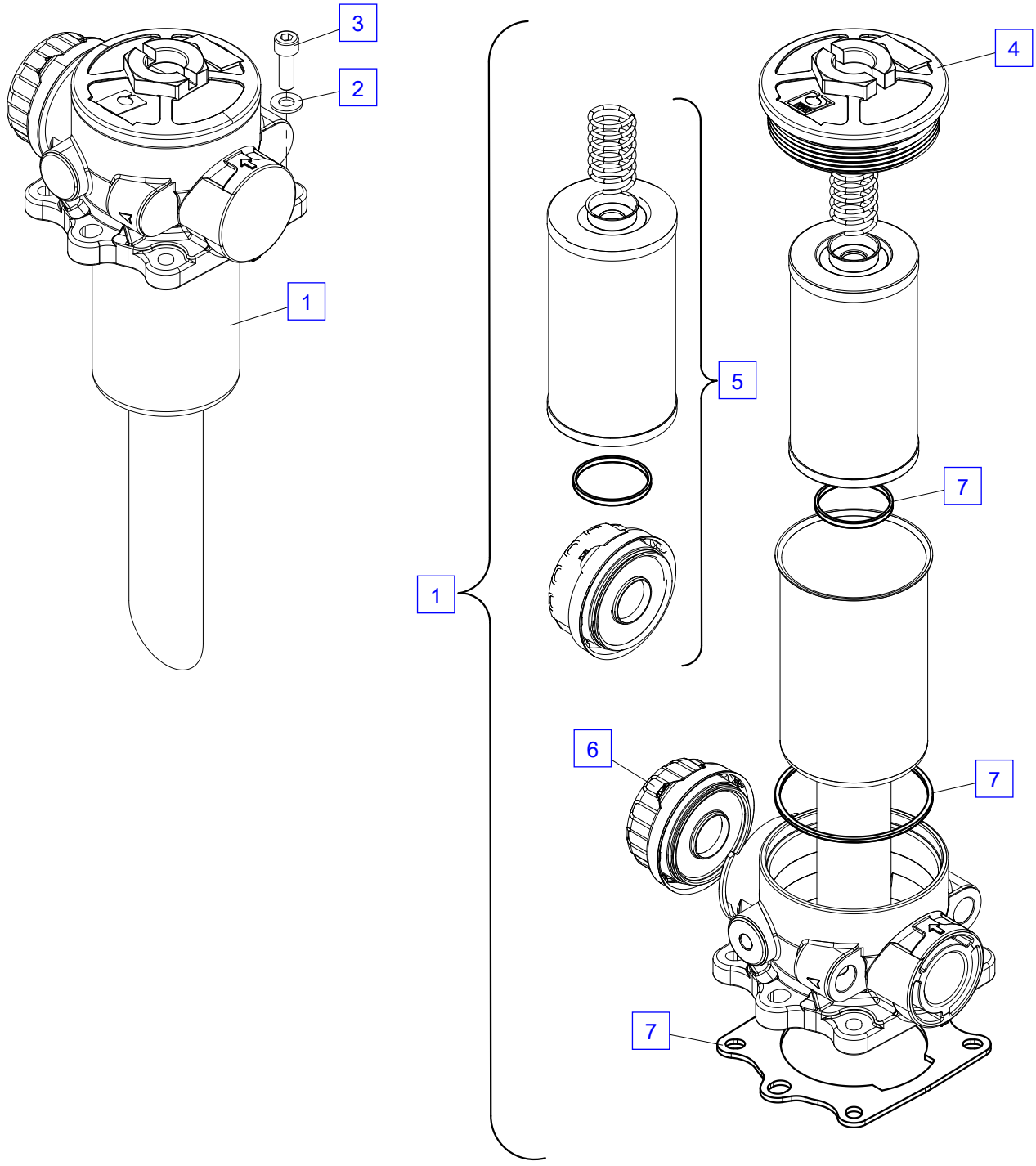

Crane hook 5.4t

No.	Spare part	Qty.	Description	Dimension
1	HIS 008	1	Pin	l=135 mm
2	EQ 042	1	Bolt retainer	D5,0 DIN11023 - 05x042 - ST
3	EZ6057	1	Suspension eye	11.5t
4	EZ1422	1	Crane hook	5,4 t
	EZ1423	1	Safety latch	

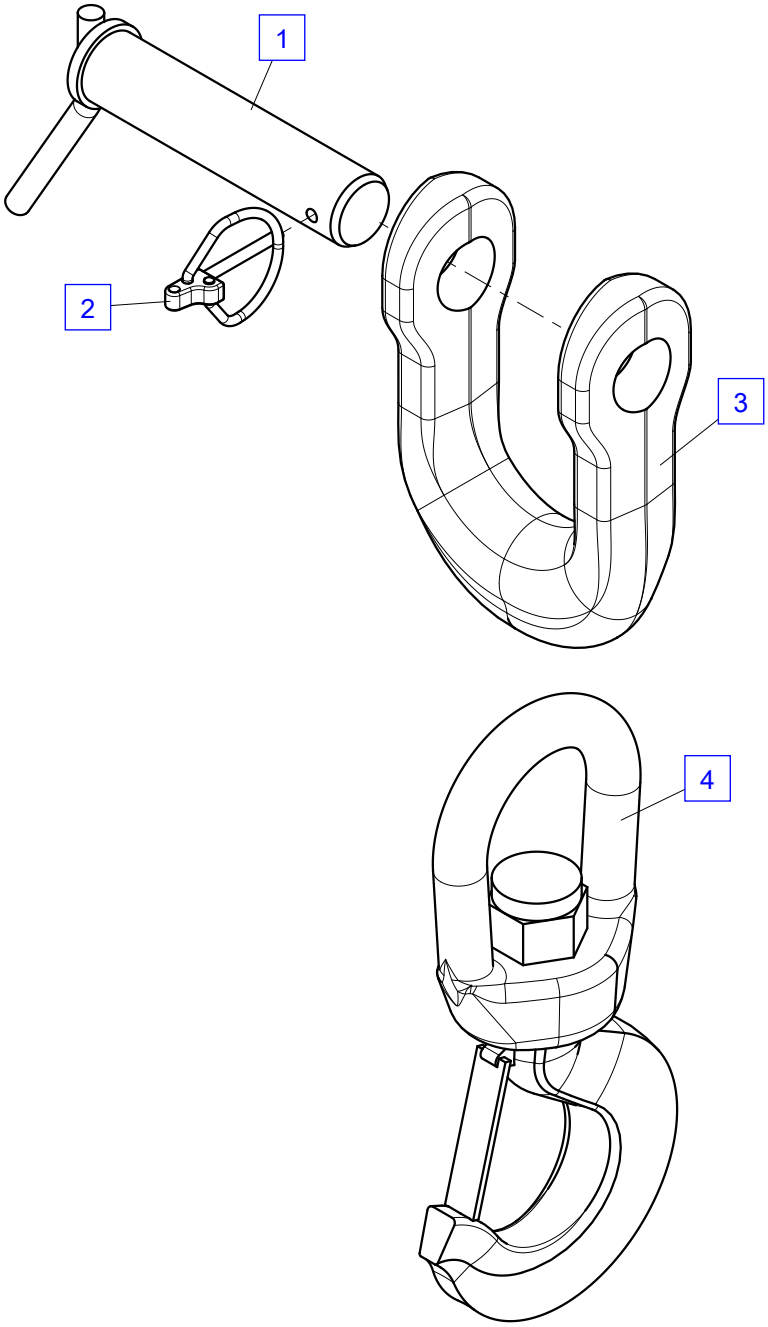
1
2
3
4

Terminal "A"

No.	Spare part	Qty.	Description	Dimension
1	EEA12240	1	Terminal PT040 "A"	248x159 mm
	EEA15813	1	Emergeny Stop button	
2	ES1482	4	Screw	M4x10 DIN 7991
3	HIG1242	4	Distance pin	

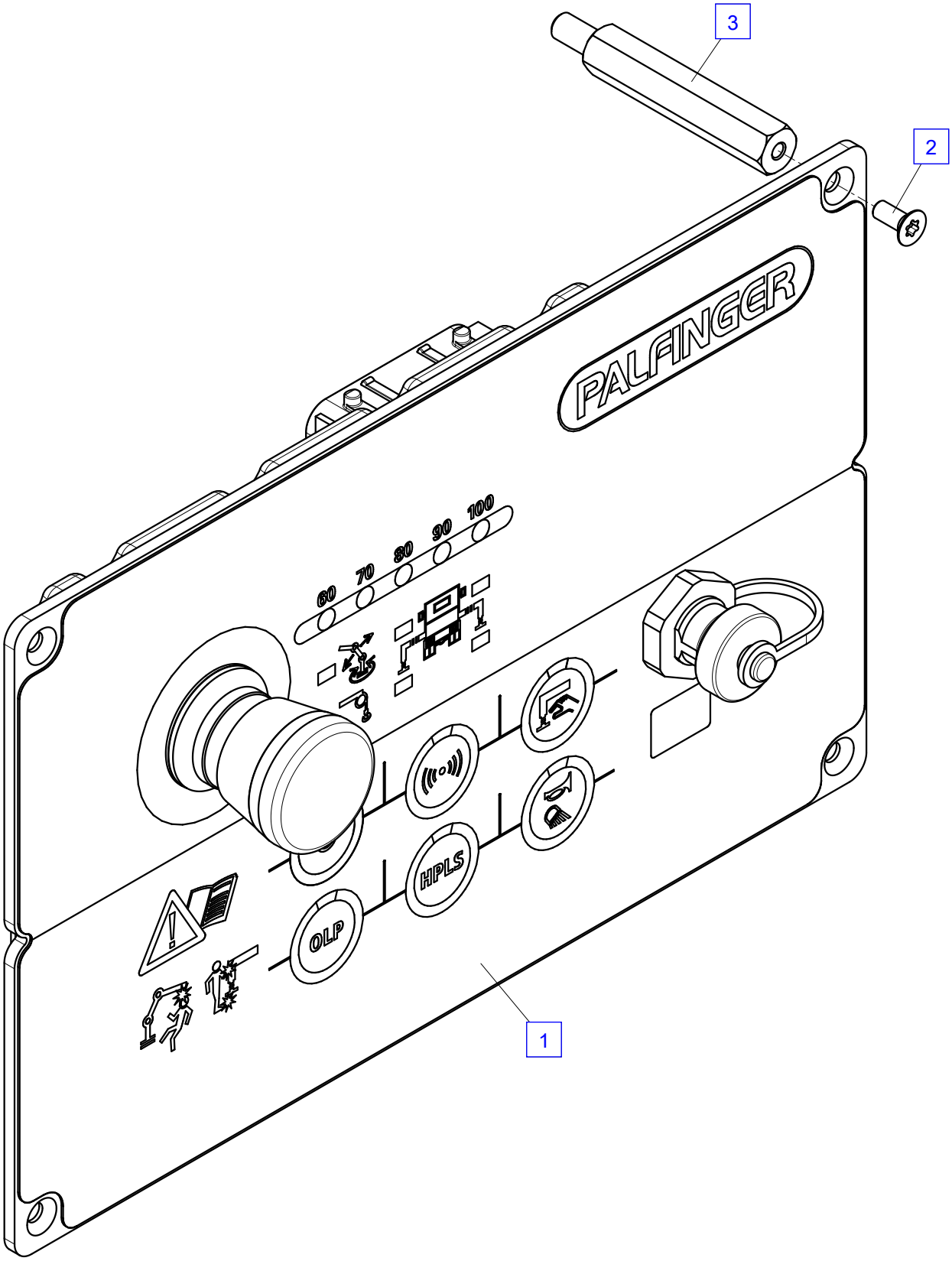
3
2
PALFINGER
60
70
80
90
100
HPLS
OLP
1

Connection box

No.	Spare part	Qty.	Description	Dimension
2	EEA13478	1	Connection box	360x160x90

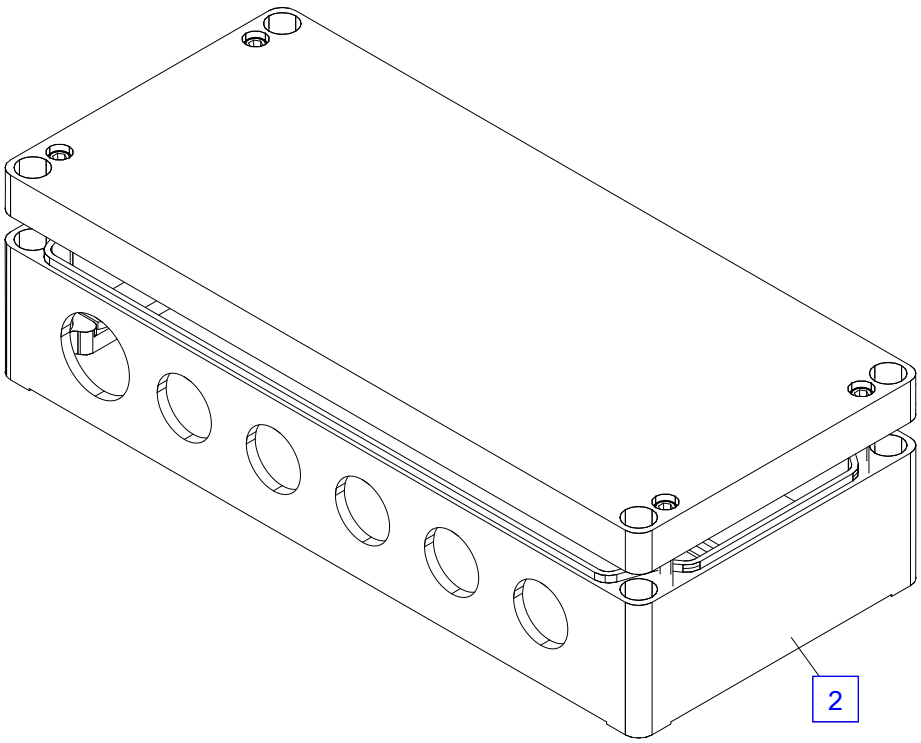
2

Terminal 3

No.	Spare part	Qty.	Description	Dimension
	EEA14607	1	Terminal 3	
1	EEA12508	1	Emergency cut-off button	
2	EB14520	1	Symbol sign	
3	EEA5767	1	Push button, green	
4	EEA14914	1	Cover	175x80x15
5	EEA6391	1	Base for breather membrane	175x80x43.5
6	EEA3711	1	Blind plug	M 25x1.5
7	EEA3703	1	Fitting	M 25x1.5 (1x7-17 mm)
8	EEA3909	1	Breather valve	M 12x1.5
9	EEA18181	1	Cable + Plug	DT 12p BK 12x0.75 mm² L=0.5 m

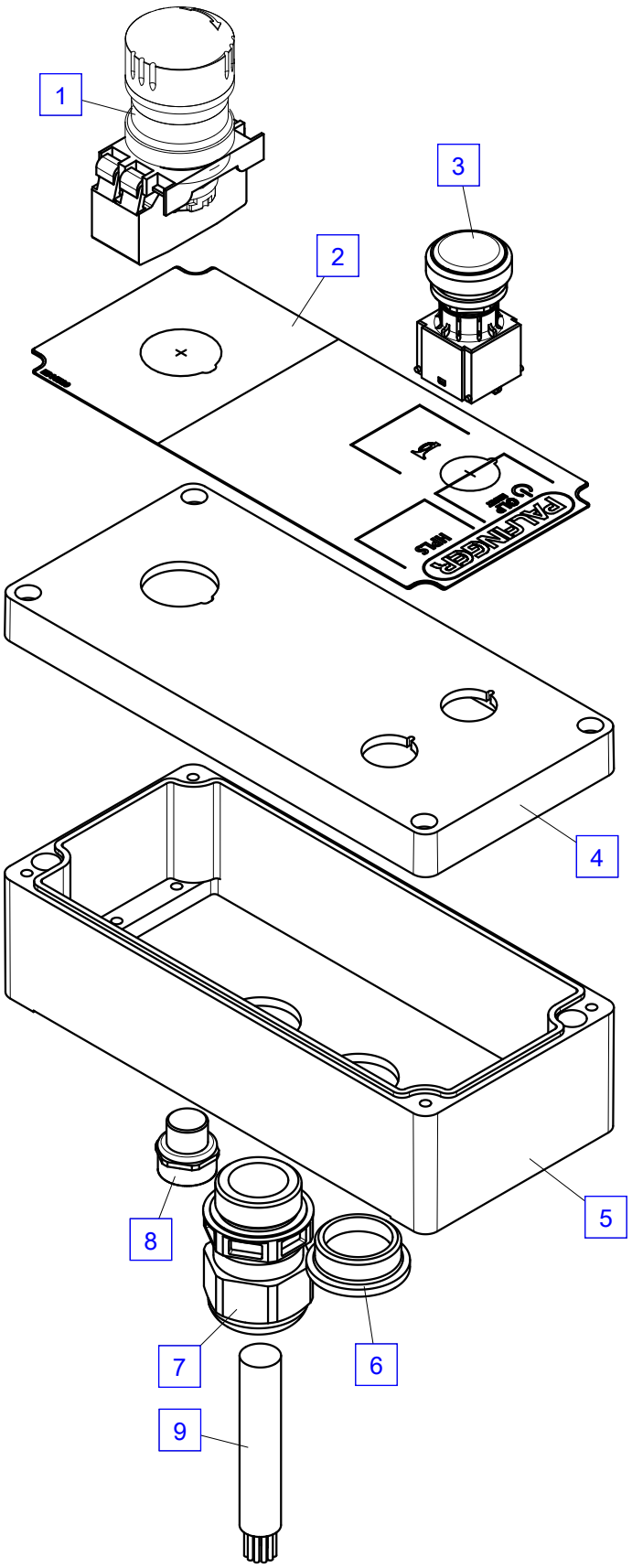
1
2
3
4
5
6
7
8
9

Cable connection (FL)

No.	Spare part	Qty.	Description	Dimension
1	EEA6194	1	Horn	12/24 VDC (H6)
2	EEA4378	0	Cable (metre goods)	12x0.75 mm²
3	EEA16429	2	Connector kit AT (12-pole) Socket	
4	EEA11926	2	Plug with cable (4-pole)	M 12 - 5 m 2x2 CAN-Bus
5	EEA6076	4	Plug with cable (4-pole)	M 12 -5 m
6	EEA13591	3	Plug with cable (3-pole)	M 8 - 4 m
7	EEA 169	0	Cable (metre goods)	2x1 mm²
8	EEA16424	2	Connector kit 2 (-pole)	
9	EEA 773	1	Plug with cable LED	3 m
10	EEA5419	0	Cable (metre goods)	2x1.5 mm²
11	EEA5421	0	Cable (metre goods)	2x2.5 mm²
12	EEA2478	0	Cable (metre goods)	2x2.5 mm²
13	EEA6154	1	Plug with cable	3,5 m

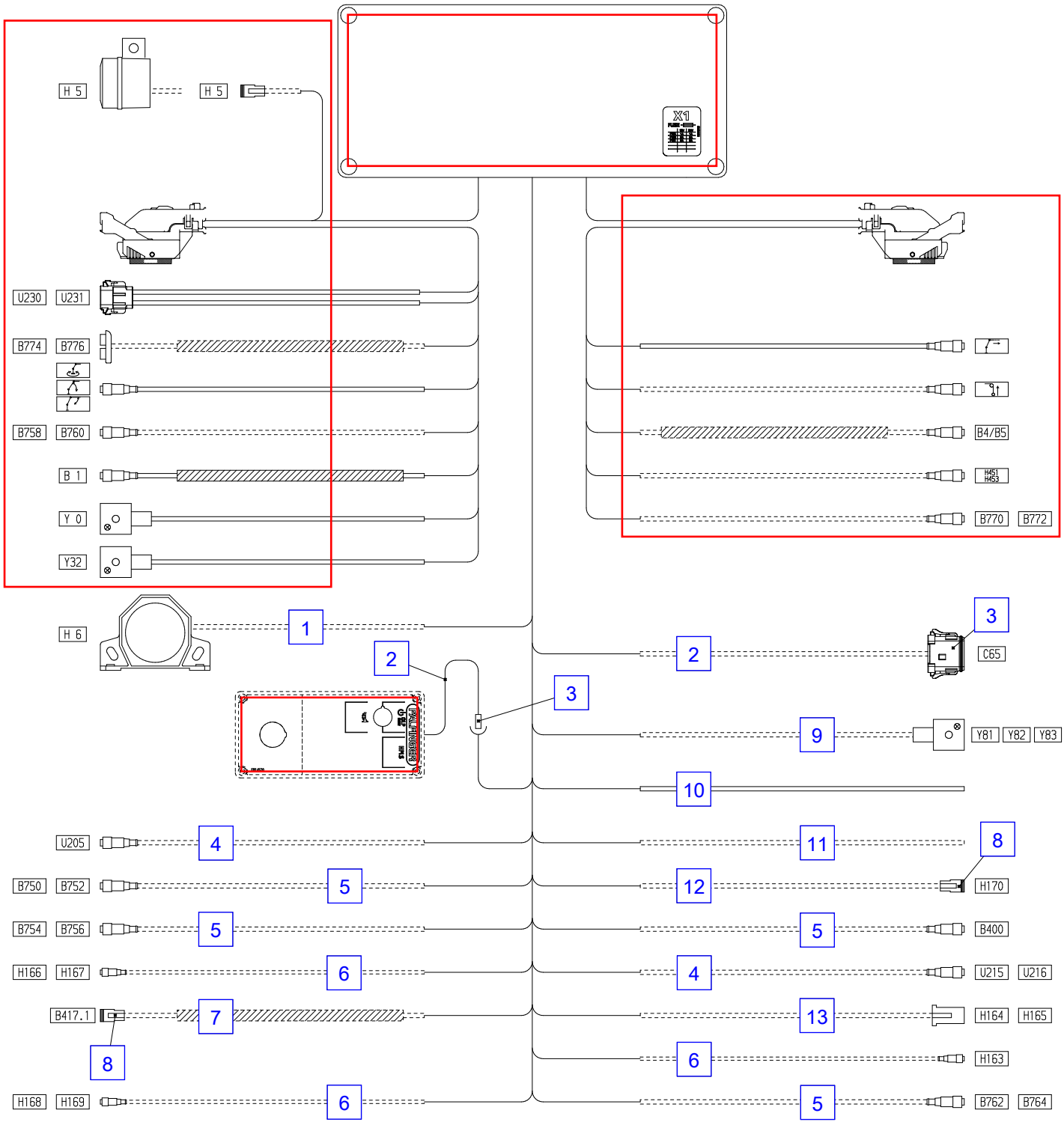
H 5
H 5
X1
U230
U231
B774
B776
B758
B760
B 1
Y 0
Y32
B4/B5
B770
B772
H 6
1
2
3
C65
9
Y81
Y82
Y83
10
U205
4
11
8
B750
B752
5
12
H170
B754
B756
5
5
B400
H166
H167
6
4
U215
U216
B417.1
7
13
H164
H165
8
6
H163
H168
H169
6
5
B762
B764

Cable harness EEA15147

No.	Spare part	Qty.	Description	Dimension
1	EEA15147	1	Cable harness	

Plug, blue

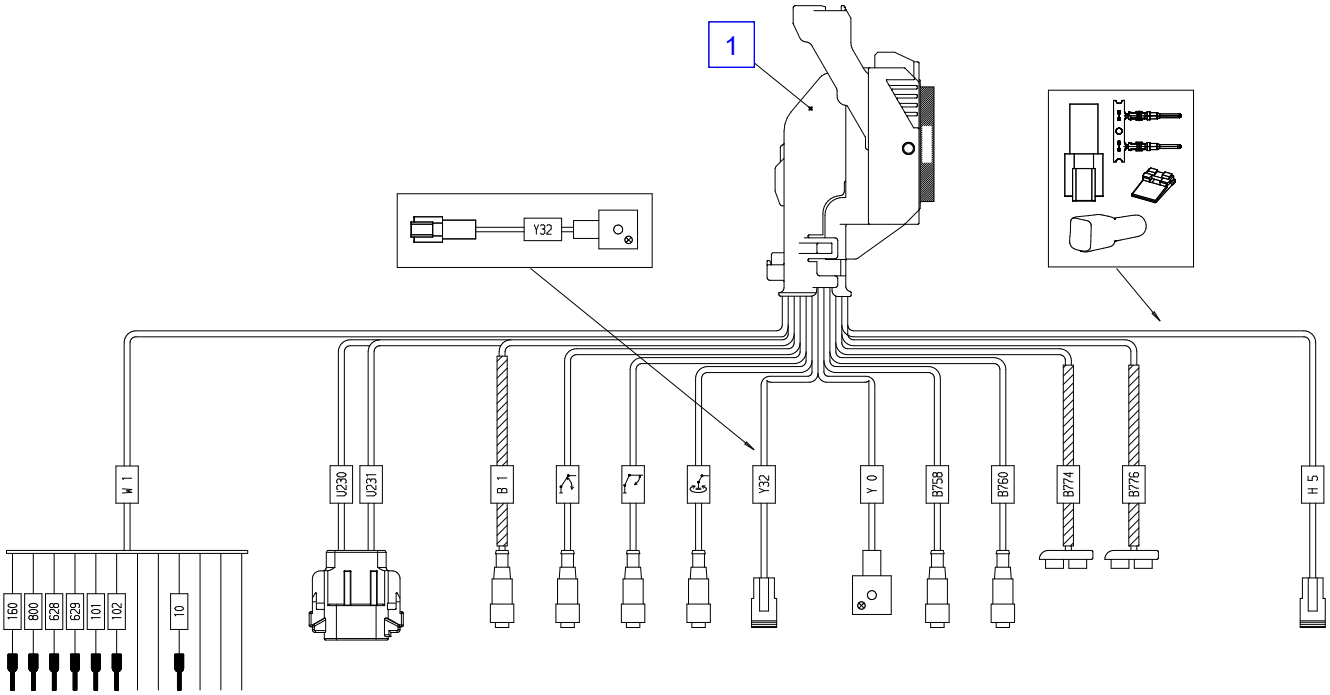
1
Y32
W 1
U230
U231
B 1
Y32
Y 0
B758
B760
B774
B776
H 5
160
800
628
629
101
102
10

Cable harness EEA15151

No.	Spare part	Qty.	Description	Dimension
1	EEA15151	1	Cable harness	

Plug, grey

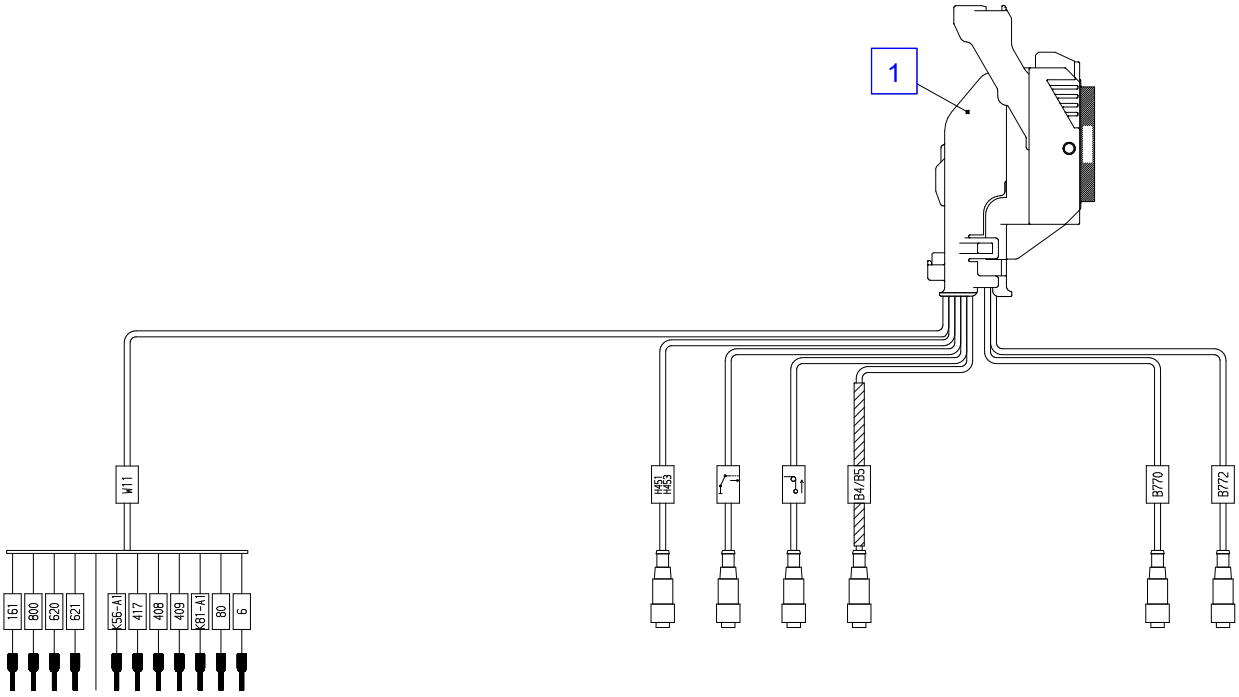
1
W11
161
800
620
621
K55-A1
417
408
409
K81-A1
80
6
B4/B5
B770
B772

Packing gland

No.	Spare part	Qty.	Description	Dimension
1	EEA3900	1	Fitting	M 12x1.5 (1x3-7 mm)
2	EEA3901	1	Fitting	M 16x1.5 (1x3-7 mm)
3	EEA3902	1	Fitting	M 20x1.5 (1x6-13 mm)
3	EEA3705	1	Fitting	M20x1.5 (1x4-13 mm)
4	EEA3703	1	Fitting	M 25x1.5 (1x7-17 mm)
4	EEA3903	1	Fitting	M 25x1.5 (1x9-17 mm)
4	EEA3709	1	Fitting	M 25x1.5 (3x5-7 mm)
4	EEA3708	1	Fitting	M 25x1.5 (4x4-6 mm)
5	EEA3704	1	Fitting	M 32x1.5 (1x13-21 mm)
5	EEA3707	1	Fitting	M 32x1.5 (2x8-10 mm)
5	EEA3706	1	Fitting	M 32x1.5 (4x5-7 mm)
5	EEA4444	1	Fitting	M 32x1.5 (6x4-6 mm)
6	EEA3905	1	Fitting	M 40x1.5 (1x16-28 mm)
6	EEA6380	1	Fitting	M 40x1.5 (6x5-7 mm)
7	EEA6359	1	Cartridge	M 20x1.5 (2x4-5 mm)
8	EEA16127	1	Cartridge	M 25x1.5 (4x4-6 mm)
9	EEA14367	1	Cartridge	M 32x1.5 (2x8-10 mm)
10	EEA3710	1	Cartridge	M 32x1.5 (3x6-8 mm)
11	EEA16043	1	Cartridge	M 32x1.5 (1x4-6 mm)(2x7-9 mm)
11	EEA16086	1	Cartridge	M 32x1.5 (1x4-6)(2x5-7)(1x6-8)
12	EEA14365	1	Cartridge	M 32x1.5 4x5-7 mm
13	EEA4414	1	Cartridge	M 32x1.5 6x4-6 mm
14	EEA4987	1	Cartridge	M 32x1.5 (8x3-5 mm)
15	EEA11601	1	Pin	D=5x25 mm
15	EEA11602	1	Pin	D=6x25 mm
15	EEA11603	1	Pin	D=7x25 mm
15	EEA11605	1	Pin	D=9x20 mm
15	EEA11604	1	Pin	D=8x20 mm
16	EEA15644	1	Fitting Messing	M 20x1.5 (1x14-16 mm)
17	EEA15993	1	Fitting Messing	M 20x1.5 (1x6-13 mm)
18	EEA3923	1	Reduction	M 16x1.5 - M 12x1.5
18	EEA3924	1	Reduction	M 20x1.5 - M 16x1.5
18	EEA3726	1	Reduction	M 25x1.5 - M 20x1.5
18	EEA4229	1	Reduction	M 32x1.5 - M 12x1.5
18	EEA4230	1	Reduction	M 32x1.5 - M 16x1.5
18	EEA3925	1	Reduction	M 32x1.5 - M 20x1.5
18	EEA3715	1	Reduction	M 32x1.5 - M 25x1.5
18	EEA3926	1	Reduction	M 40x1.5 - M 32x1.5
18	EEA13773	1	Reduction	M 50x1.5 - M 32x1.5
19	EEA3728	1	Extension	M 20x1.5 - M 25x1.5
20	EEA3716	1	Extension	M 25x1.5 - M 32x1.5
21	EEA3938	1	Extension	M 32x1.5 - M 40x1.5
22	EEA15769	1	Plug for pressure equalizing	M 25 (1x9-17 mm)
23	EEA14388	1	Plug for pressure equalizing	M 32 (1x13-21 mm)
24	EEA3906	1	Blind plug	M 12x1.5
24	EEA3907	1	Blind plug	M 16x1.5
24	EEA3727	1	Blind plug	M 20x1.5
24	EEA3711	1	Blind plug	M 25x1.5
24	EEA3712	1	Blind plug	M 32x1.5
24	EEA3908	1	Blind plug	M 40x1.5
25	EEA3920	1	Counter nut	M 12x1.5
25	EEA3921	1	Counter nut	M 16x1.5
25	EEA3714	1	Counter nut	M20x1.5
25	EEA3713	1	Counter nut	M 25x1.5
25	EEA3725	1	Counter nut	M 32x1.5
25	EEA3922	1	Counter nut	M 40x1.5
26	EEA6395	1	Ventilation membrane	M 12x1.5
27	EEA3909	1	Breather valve	M 12x1.5
28	EEA12590	1	Running of cable	KDP/X 24/19

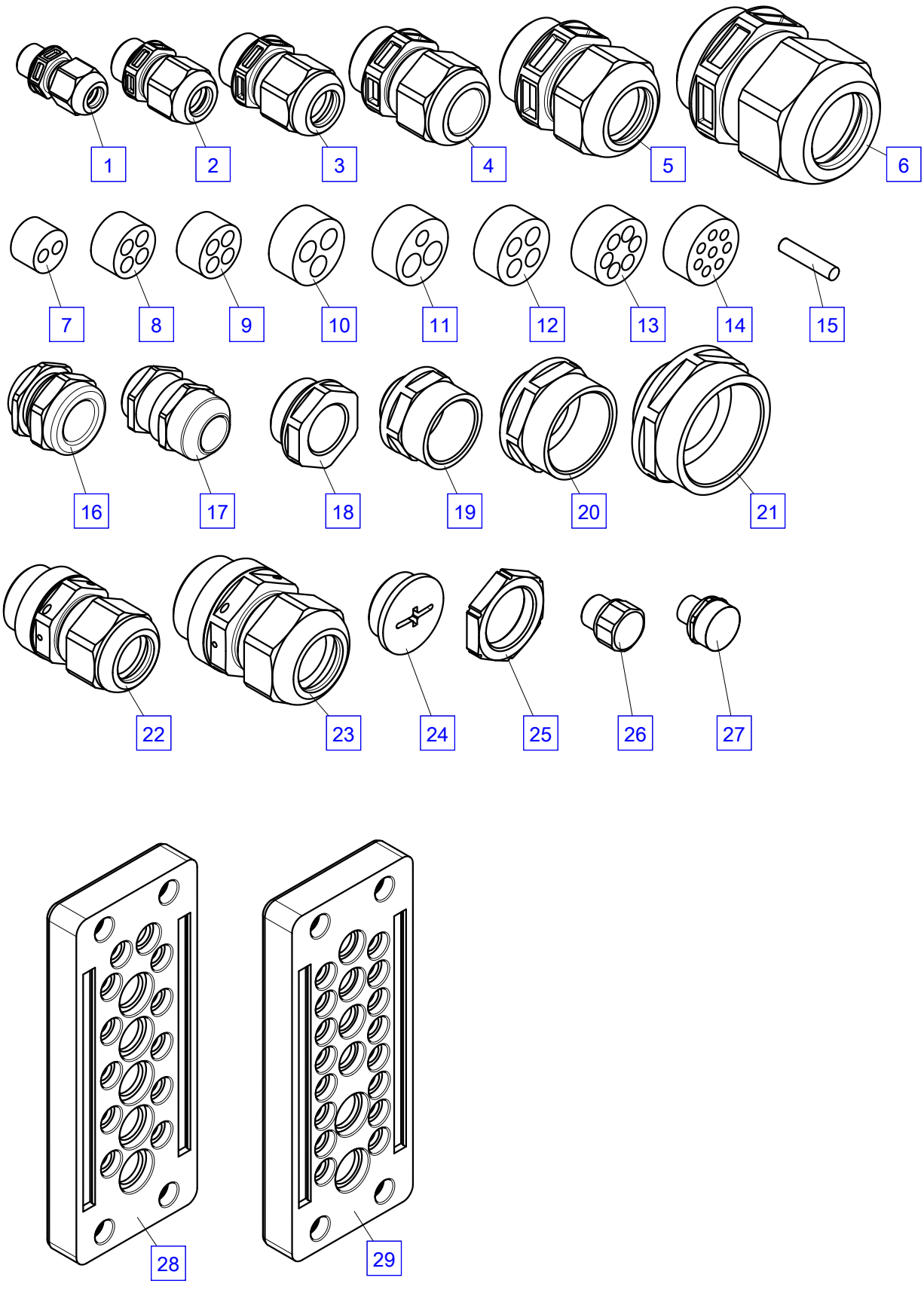
1
2
3
4
5
6
7
8
9
10
11
12
13
14
15
16
17
18
19
20
21
22
23
24
25
26
27
28
29

Packing gland

No.	Spare part	Qty.	Description	Dimension
29	EEA12591	1	Running of cable	KDP/X 24/22-1

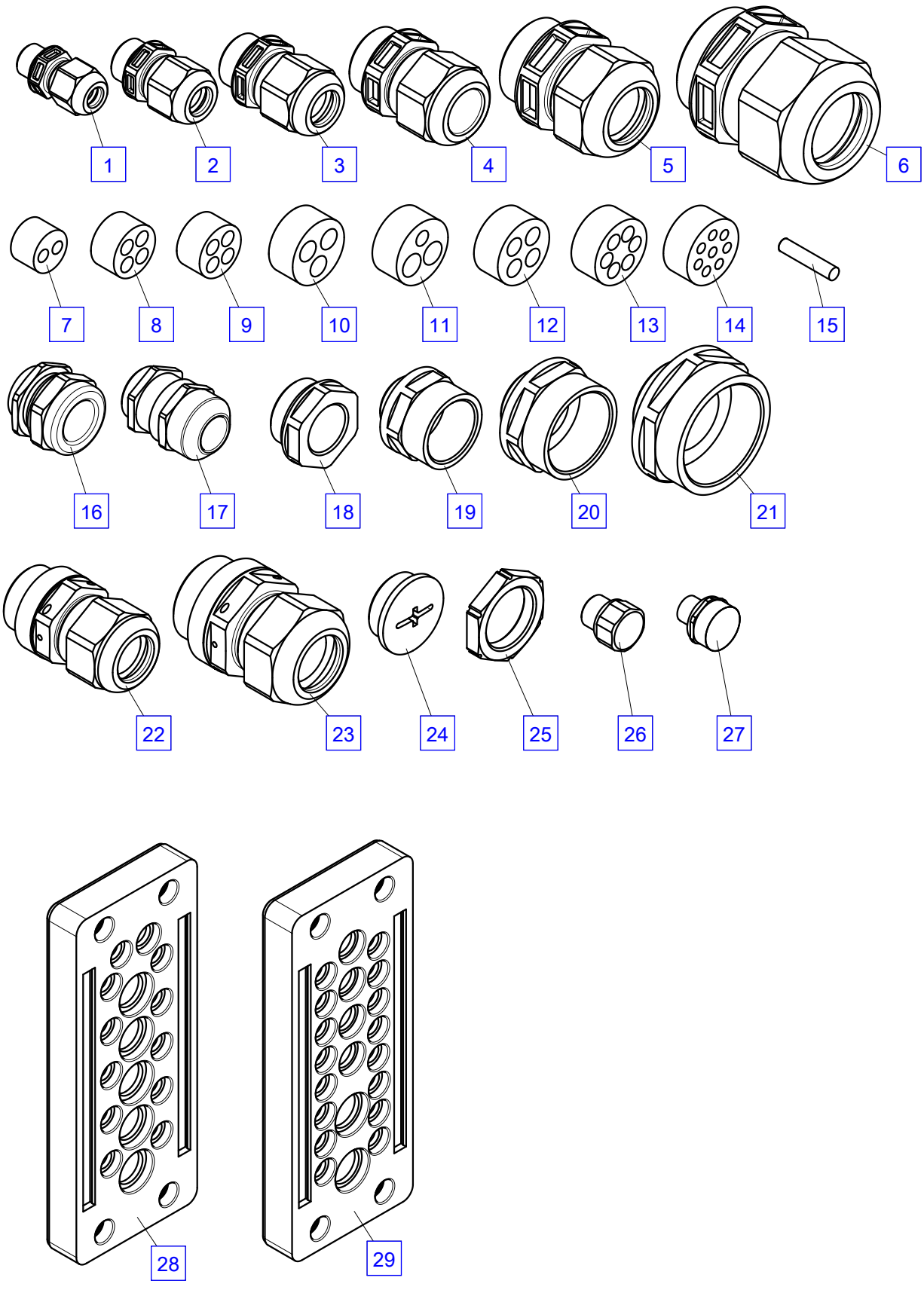
1
2
3
4
5
6
7
8
9
10
11
12
13
14
15
16
17
18
19
20
21
22
23
24
25
26
27
28
29

Switch 16 mm

No.	Spare part	Qty.	Description	Dimension
1	EEA4722	1	Push button, black	
2	EEA4723	1	Push button, green	
3	EEA4724	1	Alarm lamp, green	
4	EEA4725	1	Push button, green	
5	EEA4728	1	Switch	
6	EEA4727	1	Blind plug	
7	EEA5768	1	Switch (2-positions) (detent) Closer	
8	EEA5769	1	Switch (3-positions) (spring - detent - spring)	
9	EEA5672	1	Switch (2-positions) (detent) 2 Closer	
10	EEA6325	1	Switch (2-positions) Opener	
11	EEA6429	1	Switch (3-positions) (detent - detent - detent)	
12	EEA9791	1	Switch (2-positions) 1 Opener - 1 Closer	
13	EEA5766	1	Alarm lamp, green	
14	EEA9813	1	Alarm lamp, red	
15	EEA13310	1	Alarm lamp, yellow	
16	EEA11657	1	Push button, red 1 Opener - 1 Closer	
17	EEA5795	1	Push button, green (detent) 2 Closer	
18	EEA9834	1	Push button, green 1 Opener - 1 Closer	
19	EEA5340	1	Key switch	
20	EEA6077	1	Emergency cut-off button	
21	EEA5767	1	Push button, green (spring)	
22	EEA13362	1	Push button, black 2 Closer	
23	EEA5765	1	Blind plug	
24	EEA5041	1	Blind plug	

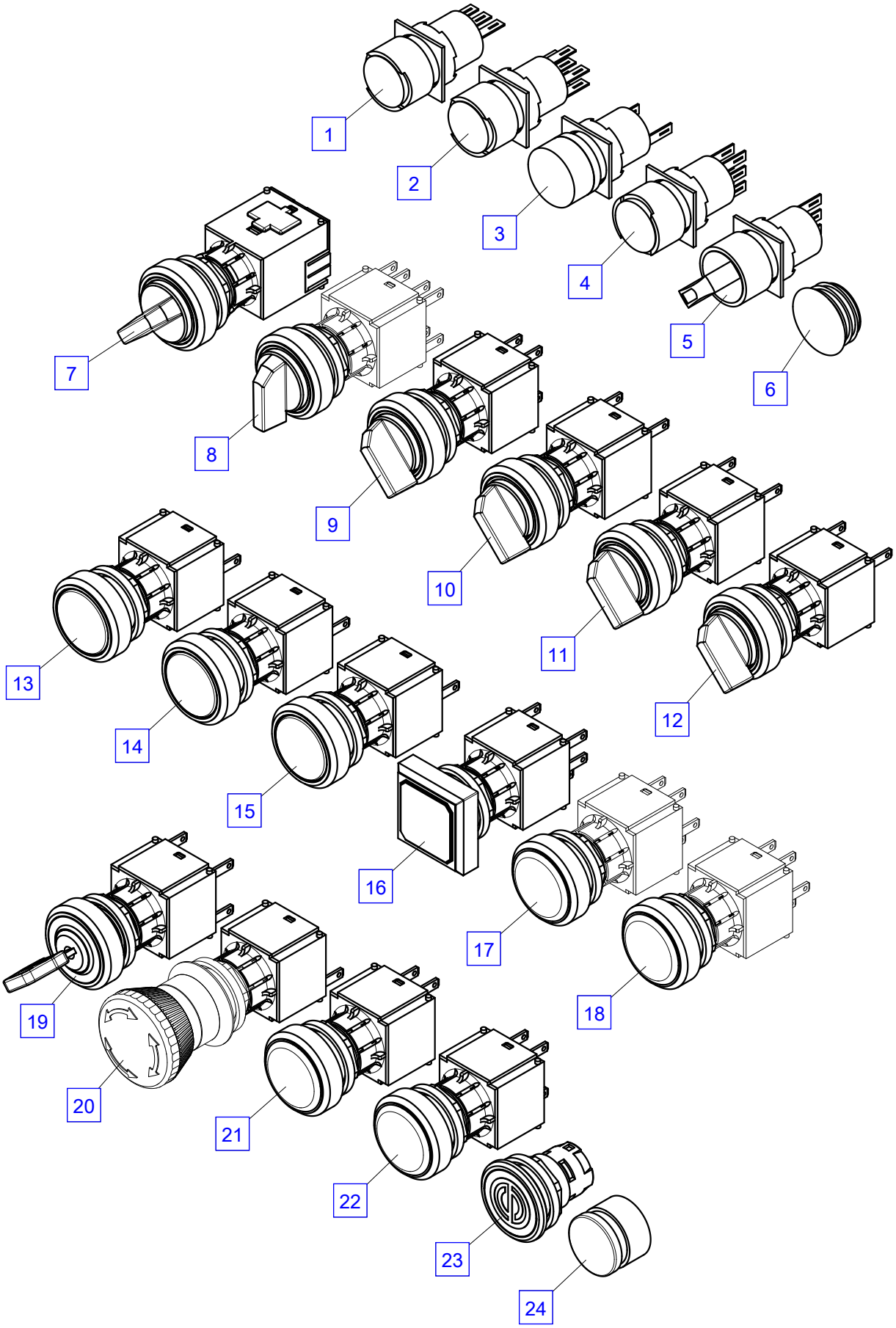
1
2
3
4
5
6
7
8
9
10
11
12
13
14
15
16
17
18
19
20
21
22
23
24

Switch 22 mm

No.	Spare part	Qty.	Description	Dimension
1	EEA2998	1	Emergency cut-off button	
2	EEA3008	1	Switch, black	
3	EEA5671	1	Switch (2-positions) 1 Opener - 1 Closer	
4	EEA2999	1	Button cpl. (normally open)	
5	EEA3000	1	Key switch (2-positions) 1 Opener - 1 Closer	
6	EEA18614	1	Key switch (2-positions) (detent) Opener	
7	EEA18553	1	Switch 2-Opener	
8	EEA6082	1	Emergency cut-off button	
9	EEA12508	1	Emergency cut-off button	
10	EEA9830	1	Emergency cut-off Module	
11	EEA9829	1	Emergency cut-off button	
12	EEA9861	1	Emergency cut-off button (cpl.)	
13	EEA6351	1	Emergency cut-off button (cpl.)	
14	EEA3001	1	Blind plug	
15	EEA4087	1	Switch (3-positions)	
16	EEA3002	1	Key switch (3-positions)	
17	EEA5703	1	Switch (2-positions) (detent) Closer	
18	EEA4398	1	Switch (3-positions) (detent)Closer	

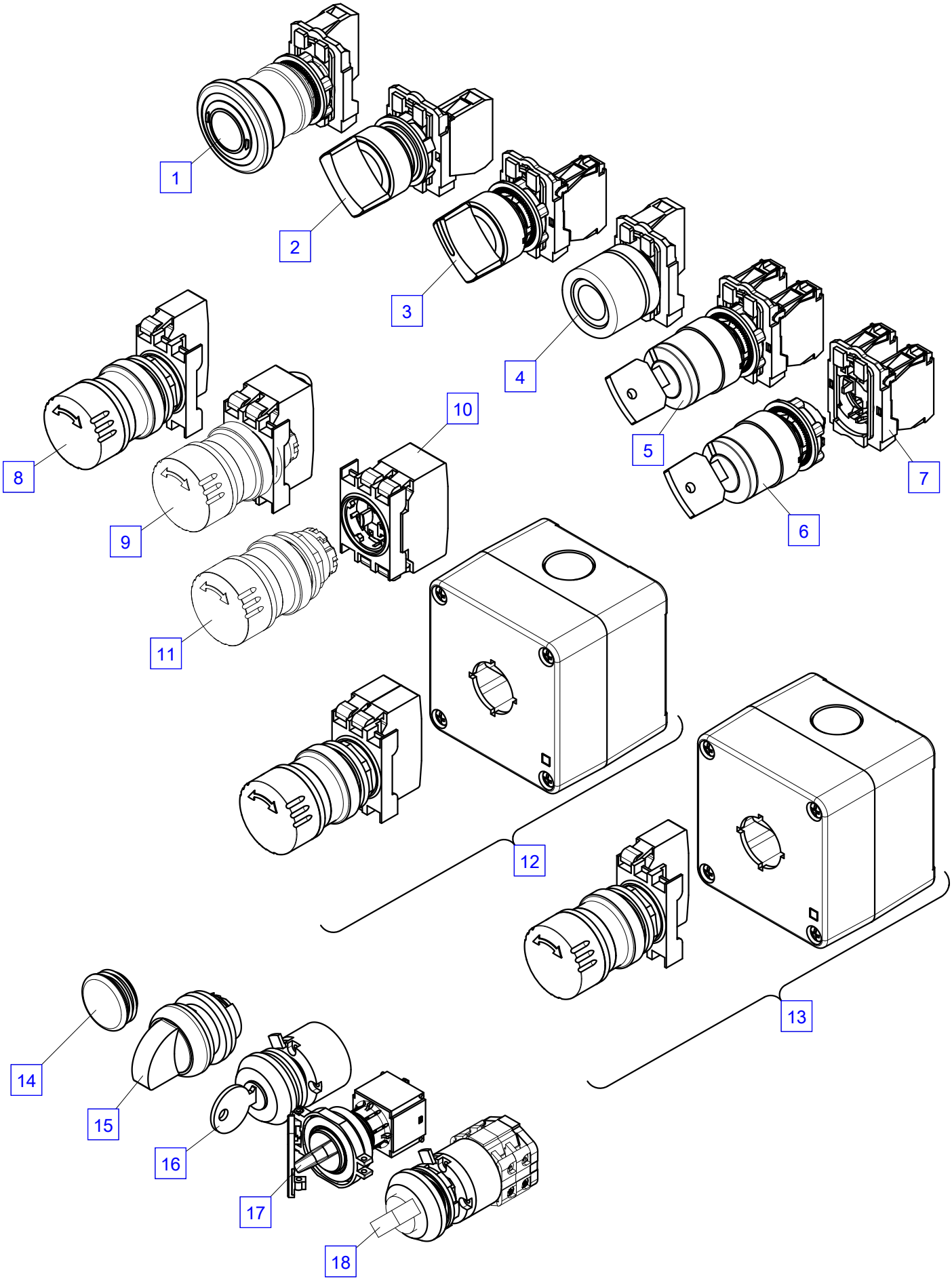
1
2
3
4
5
6
7
8
9
10
11
12
13
14
15
16
17
18

Line-up terminal

No.	Spare part	Qty.	Description	Dimension
1	EEA4552	1	Cross connection (2-sections)	ZDK 27.6 mm
2	EEA4553	1	Cross connection (3-sections)	ZDK 27.6 mm
3	EEA4554	1	Cross connection (4-sections)	ZDK 27.6 mm
4	EEA4555	1	Cross connection (5-sections)	ZDK 27.6 mm
5	EEA4556	1	Cross connection (6-sections)	ZDK 27.6 mm
6	EEA11586	1	Cross connection (7-sections)	ZDK 27.6 mm
7	EEA11587	1	Cross connection (8-sections)	ZDK 27.6 mm
8	EEA11588	1	Cross connection (9-sections)	ZDK 27.6 mm
9	EEA4557	1	Cross connection (10-sections)	ZDK 27.6 mm
10	EEA13845	1	Cross connection (2-sections) Fuse bracket	ZQV 6/2 GE
11	EEA14477	1	Cross connection (3-sections) Fuse bracket	ZQV 6/3 GE
12	EEA18335	1	Cross connection (4-sections) Fuse bracket	ZQV 6/4 GE
13	EEA9803	1	Stop plate	ZDK
14	EEA9802	1	Line-up terminal	ZDK max. 2.5²
15	EEA4550	1	Line-up terminal	ZDK max. 2.5²
15	EEA4559	1	Line-up terminal LED	ZDK max. 2.5²
16	EEA4551	1	Stop plate	ZDK 27.6 mm
17	EEA9789	1	Stop plate	
18	EEA4558	1	End terminal	ZDK
19	EEA6078	1	Fuse bracket	
20	EEA6090	1	Fuse	1 A
20	EEA1803	1	Fuse	3 A
20	EEA4577	1	Fuse	5 A
20	EEA1804	1	Fuse	7.5 A
20	EEA1805	1	Fuse	10 A
20	EEA1806	1	Fuse	15 A
20	EEA1807	1	Fuse	20 A
21	EEA4548	1	Cross connection (2-sections)	ZDK 23 mm
22	EEA11166	1	Cross connection (3-sections)	ZDK 23 mm
23	EEA4932	1	Cross connection (4-sections)	ZDK 23 mm
24	EEA11453	1	Cross connection (5-sections)	ZDK 23 mm
25	EEA11454	1	Cross connection (6-sections)	ZDK 23 mm
26	EEA4547	1	End terminal	ZDK
27	EEA4543	1	Line-up terminal	ZDK max. 2.5²
27	EEA4544	1	Line-up terminal blue	ZDK max. 2.5²
27	EEA4545	1	Line-up terminal green	ZDK max. 2.5²
28	EEA4546	1	Connection plate	ZDK
29	EEA4560	1	Line-up terminal	
30	EEA5230	1	Line-up terminal diode	ZDK max. 2.5²
31	EEA4563	1	Stop plate	

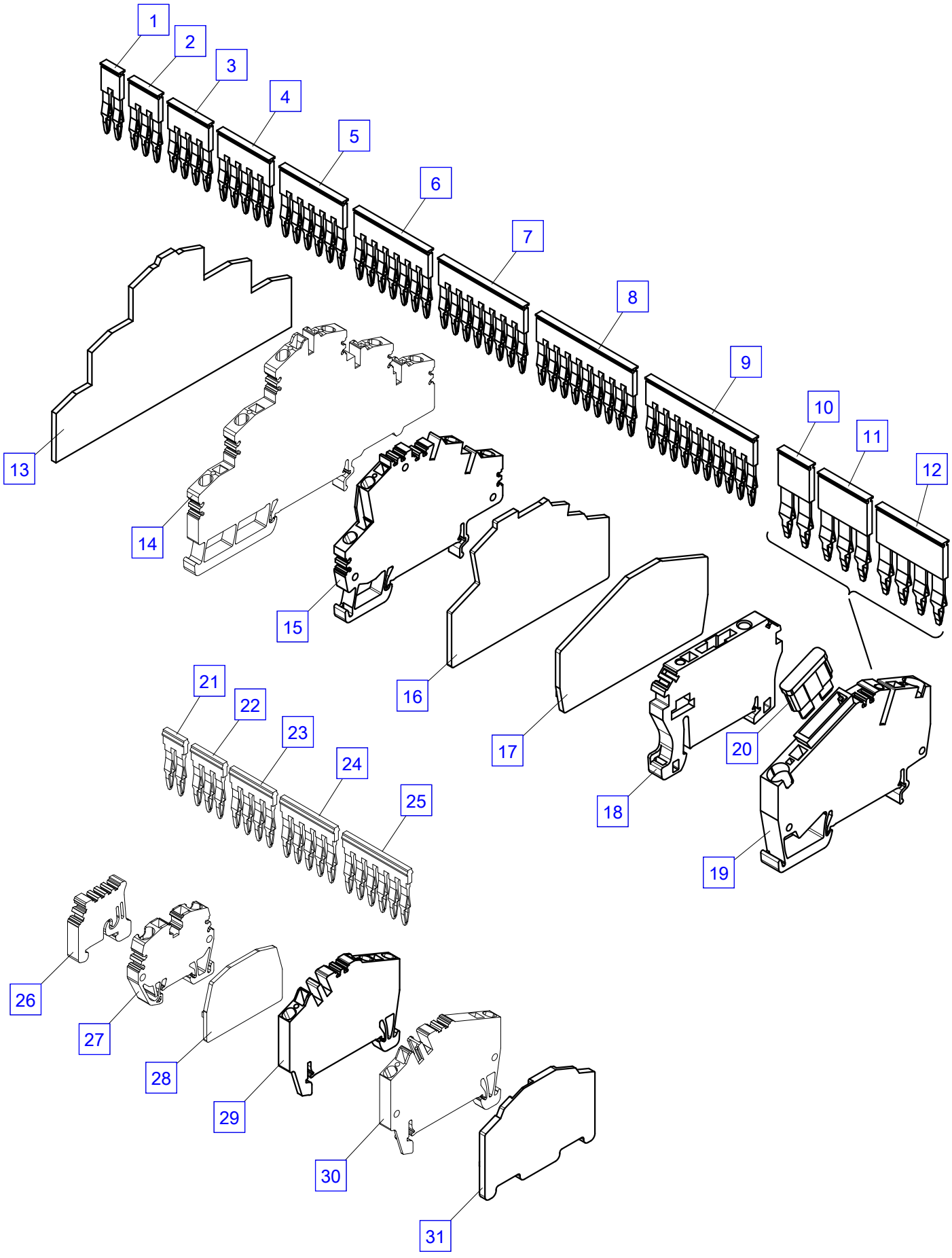
1
2
3
4
5
6
7
8
9
10
11
12
13
14
15
16
17
18
19
20
21
22
23
24
25
26
27
28
29
30
31

Relay (1)

No.	Spare part	Qty.	Description	Dimension
1	EE 024	1	Relay	24V 10A
2	EE 101	1	Relay	24V 12A
3	EE 102	1	Relay	24V 7A
4	EE 124	1	Relay - gold contakt	24V 7A
5	EE 127	1	Relay	24V 8A
6	EEA1456	1	Relay	24V 4A
6	EEA4088	1	Relay - gold contakt	24V 6A
7	EEA6216	1	Relay - projector	24V 10A
	EEA17332	1	Wrapping fixture	
8	EEA 986	1	Time lag relay	24V 2A
9	EEA4540	1	Time lag relay - clock generator	24-48V 10h
9	EEA5351	1	Time lag relay - radio controlled support	12-240VAC/DC
10	EEA3481	1	Time lag relay - clock generator	12V 10A
11	EEA1812	1	Relay	24V 16A
12	EEA4297	1	Relay	24V 16A
13	EEA5060	1	Time lag relay	8...32Vdc
14	EEA1425	1	Relay	24V 10A

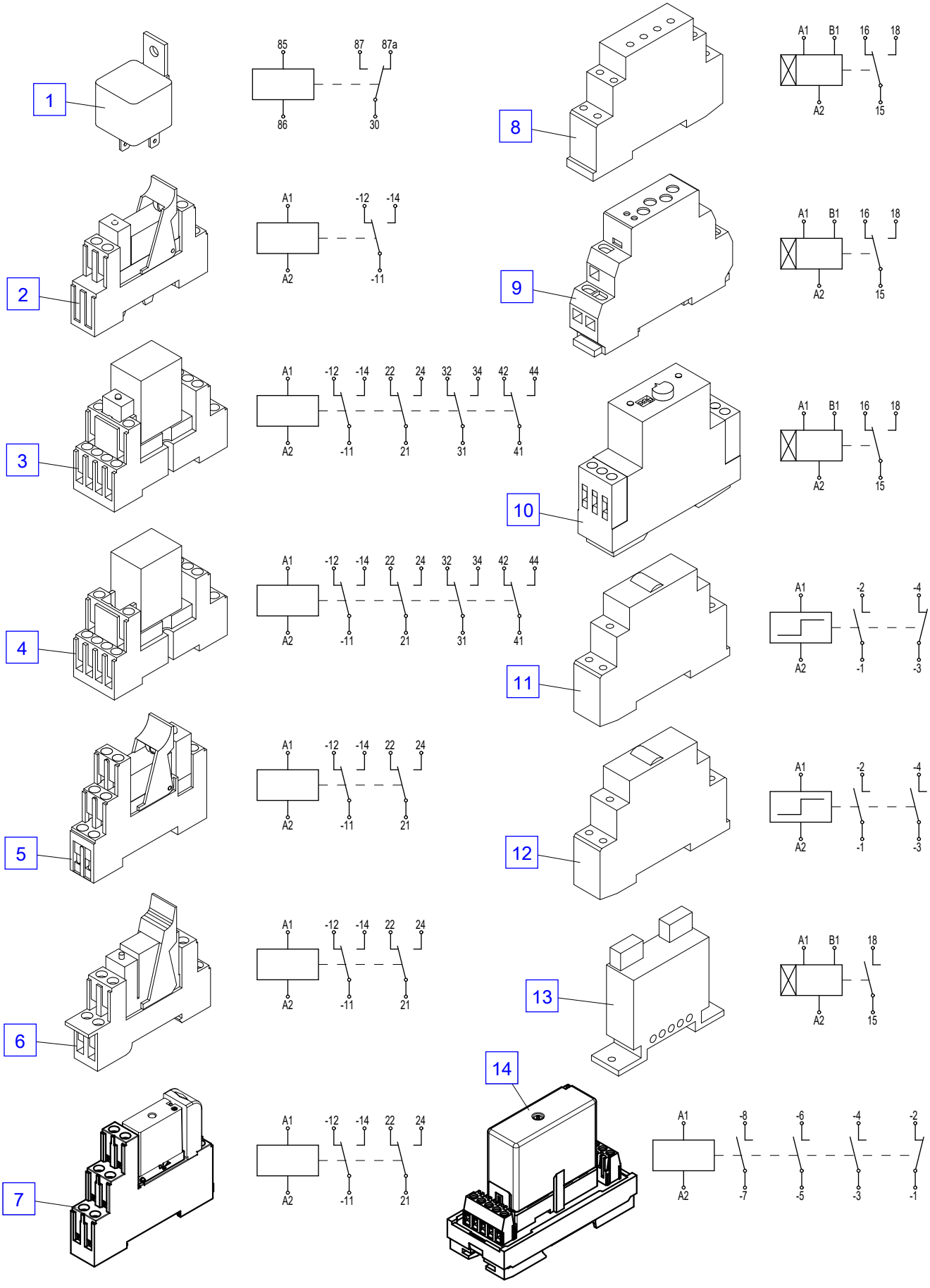
1
85
87
87a
86
30
2
A1
-12
-14
A2
-11
3
A1
-12
-14
22
24
32
34
42
44
A2
-11
21
31
41
4
A1
-12
-14
22
24
32
34
42
44
A2
-11
21
31
41
5
A1
-12
-14
22
24
A2
-11
21
6
A1
-12
-14
22
24
A2
-11
21
7
A1
-12
-14
22
24
A2
-11
21
8
A1
B1
16
18
A2
15
9
A1
B1
16
18
A2
15
10
A1
B1
16
18
A2
15
11
A1
-2
-4
A2
-1
-3
12
A1
-2
-4
A2
-1
-3
13
A1
B1
18
A2
15
14
A1
-8
-6
-4
-2
A2
-7
-5
-3
-1

Relay (2)

No.	Spare part	Qty.	Description	Dimension
2	EEA3971	1	Relay	24V 6A
3	EEA4972	1	Relay	24V 6A
4	EEA2342	1	Relay	24V 20A
5	EEA3748	1	Relay	24V 18A
6	EEA20822	1	Relay	24VDC 1CO
7	EEA5319	1	Stop plate	24V
8	EEA11842	1	Cross connection (blue 3-sections)	ZDK 25.7 mm
9	EEA11814	1	Cross connection (blue 4-sections)	ZDK 25.7 mm
10	EEA11843	1	Cross connection (blue 6-sections)	ZDK 25.7 mm
11	EEA16667	1	Kit diode	
12	EEA16093	1	Kit Workman basket	
13	EEA4558	2	End terminal	ZDK
14	EEA1425	2	Relay	24V 10A
15	EEA1456	4	Relay	24V 4A
16	EEA20822	1	Relay	24VDC 1CO
17	EEA20823	1	Cross connection (blue 10-sections)	

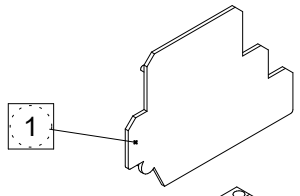

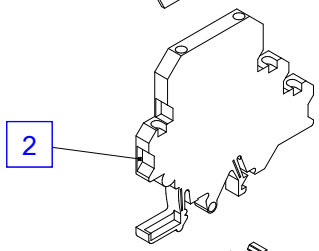

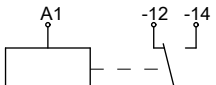

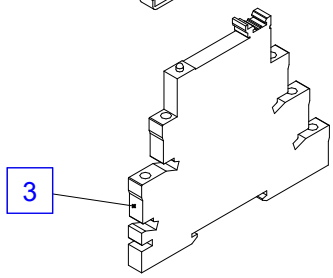

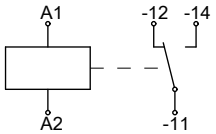

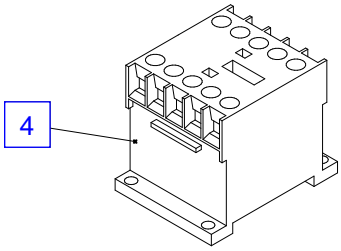

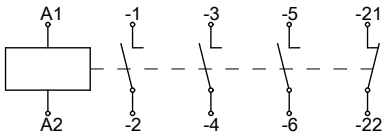

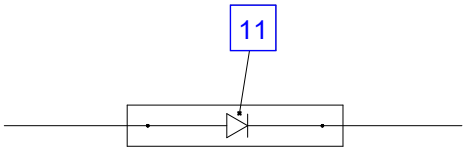

Type new

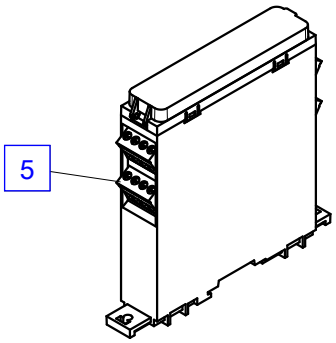

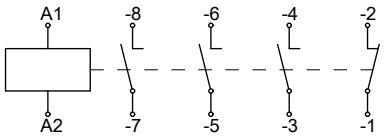

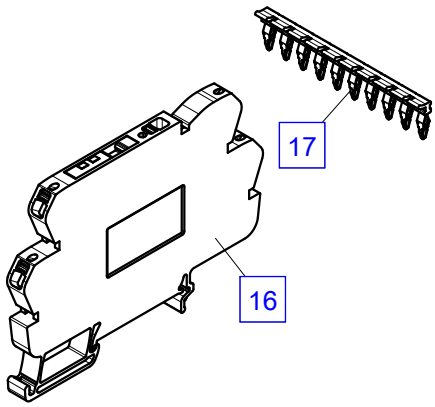

Type old

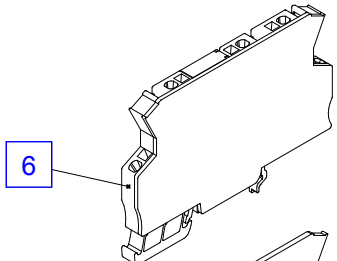

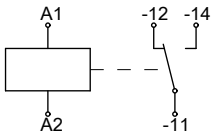

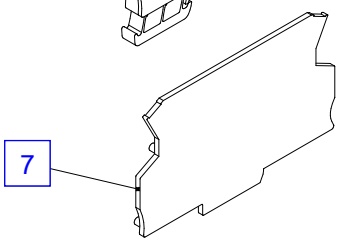

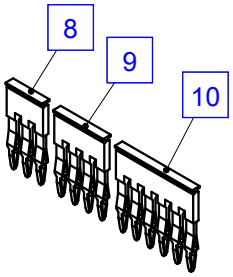

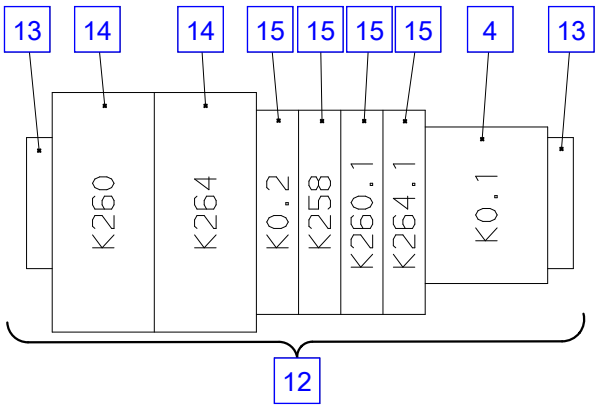

Cable - Protection hose

No.	Spare part	Qty.	Description	Dimension
1	EEA1755	1	Cable (metre goods)	4x0.34 mm²
1	EEA9705	1	Cable (metre goods)	2x0.5 mm²
1	EEA 058	1	Cable (metre goods)	3x0.5 mm²
1	EEA6213	1	Cable (metre goods)	7x0.5 mm²
1	EEA6214	1	Cable (metre goods)	16x0.5 mm²
1	EEA5354	1	Cable (metre goods)	18x0.5 mm²
1	EEA4380	1	Cable (metre goods)	2x0.75 mm²
1	EEA4379	1	Cable (metre goods)	4x0.75 mm²
1	EEA6169	1	Cable (metre goods)	6x0.75 mm²
1	EEA4378	1	Cable (metre goods)	12x0.75 mm²
1	EEA 169	1	Cable (metre goods)	2x1 mm²
1	EEA3814	1	Cable (metre goods)	3x1 mm²
1	EEA4598	1	Cable (metre goods)	7x1 mm²
1	EEA 790	1	Cable (metre goods)	16x1 mm²
1	EEA 170	1	Cable (metre goods)	2x1.5 mm²
1	EEA 162	1	Cable (metre goods)	3x1.5 mm²
1	EEA1026	1	Cable (metre goods)	3x1.5 mm²
1	EEA 192	1	Cable (metre goods)	7x1.5 mm²
1	EEA4377	1	Cable (metre goods)	10x1.5 mm²
1	EEA5370	1	Cable (metre goods)	33x1.5 mm²
1	EEA11460	1	Cable (metre goods)	36x1.5 mm²
1	EEA2478	1	Cable (metre goods)	2x2.5 mm²
1	EEA4376	1	Cable (metre goods)	5x2.5 mm²
1	EEA13187	1	Cable (CAN-Bus 6-pole) metre goods	4x0.75 mm² - 2x0.5 mm²
1	EEA5503	1	Cable (CAN 18-pole) metre goods	15x1 - 3x0.34 mm²
1	EEA6172	1	Cable (CAN 34-pole) metre goods	17x1 - 14x0.5 - 3x0.34 mm²
1	EEA13157	1	Cable (CAN 2x 41-pole) metre goods	25x1 - 12x0.5 - 4x0.34 mm²
1	EEA11929	1	Cable (CAN 6-pole) metre goods	2x0.64 - 4x1.5 mm²
1	EEA12630	1	Cable (EBS 7-pole) metre goods	5x1.5 - 2x4 mm²
1	MX51275645000	1	Cable (15-pole) metre goods	12x1.5 - 3x2.5 mm²
2	EEA7957	1	Cable (metre goods) red	6 mm²
2	EEA16256	1	Cable (metre goods)	6 mm²
2	EEA14735	1	Cable (metre goods) red	16 mm²
2	EEA14734	1	Cable (metre goods) black	16 mm²
2	EEA14733	1	Cable (metre goods) red	35 mm²
2	EEA14732	1	Cable (metre goods) black	35 mm²
2	EEA11755	1	Cable (metre goods) red	50 mm²
2	EEA11786	1	Cable (metre goods) black	50 mm²
2	EEA12338	1	Cable (metre goods) red	95 mm²
2	EEA12339	1	Cable (metre goods) black	95 mm²
3	EEA1007	1	Cable for drag chain (metro goods)	2x0.5 mm²
3	EEA3960	1	Cable for drag chain (metro goods)	7x0.5 mm²
3	EEA3876	1	Cable for drag chain (metro goods)	12x0.5 mm²
3	EEA5055	1	Cable for drag chain (metro goods)	3x0.75 mm²
3	EEA 922	1	Cable for drag chain (metro goods)	4x1 mm²
3	EEA 026	1	Cable for drag chain (metro goods)	5x1 mm²
3	EEA2141	1	Cable for drag chain (metro goods)	5x1 mm²
3	EEA 134	1	Cable for drag chain (metro goods)	12x1 mm²
3	EEA 791	1	Cable for drag chain (metro goods)	18x1 mm²
3	EEA5752	1	Cable for drag chain (metro goods)	22x1 mm²
3	EEA 127	1	Cable for drag chain (metro goods)	25x1 mm²
3	EEA1679	1	Cable for drag chain (metro goods)	36x1 mm²
3	EEA4905	1	Cable for drag chain (metro goods)	3x1.5 mm²
3	EEA1705	1	Cable for drag chain (metro goods)	5x1.5 mm²
3	EEA1267	1	Cable for drag chain (metro goods)	12x1.5 mm²
3	EEA1268	1	Cable for drag chain (metro goods)	12x1.5 mm²
3	EEA1853	1	Cable for drag chain (metro goods)	18x1.5 mm²
3	EEA6381	1	Cable for drag chain (metro goods)	25x1.5 mm²
3	EEA 701	1	Cable for drag chain (metro goods)	3x2.5 mm²
3	EEA1704	1	Cable for drag chain (metro goods)	5x2.5 mm²
3	EEA 921	1	Cable for drag chain (metro goods)	7x2.5 mm²
3	EEA5505	1	Cable for drag chain (metro goods)	4x2.5 + 5x1 mm²

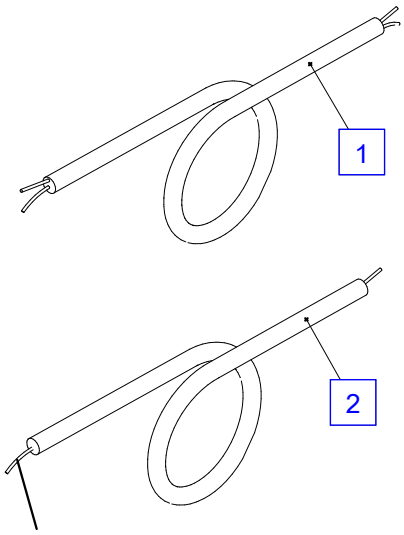

single

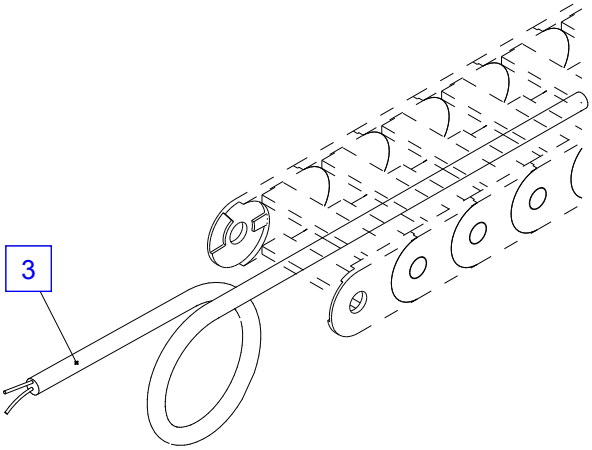

Cable for drag chain (metro goods)

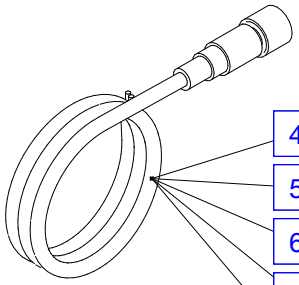

4 Plug M8 - Socket M8
5 Socket M8 - Cable
6 Plug M12 - Socket M12
7 Socket M12 - Cable
8 Plug CAN-Bus

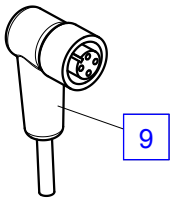

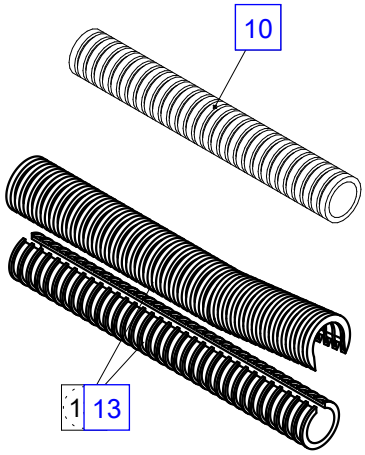

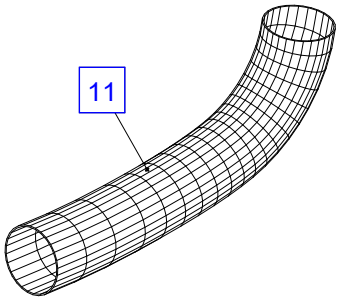

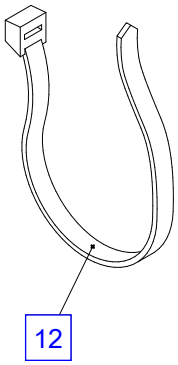

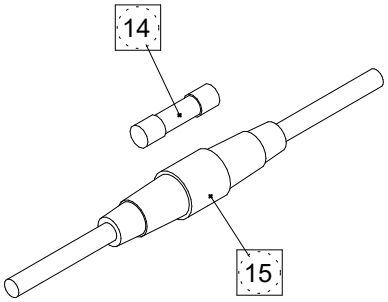

Cable - Protection hose

No.	Spare part	Qty.	Description	Dimension
3	EEA5371	1	Cable for drag chain (metro goods)	4x6 mm²
3	EEA5260	1	Cable for drag chain (metro goods)	CAN 25x1,12x0.5,3x0.34 mm"
4	EEA13718	1	Connecting cable (3-pole)	M 8 - 3.5 m
4	EEA14052	1	Connecting cable (3-pole)	M 8 - 5 m
4	EEA14053	1	Connecting cable (3-pole)	M 8 - 6 m
4	EEA13651	1	Connecting cable (3-pole)	M 8 - 7 m
4	EEA13589	1	Connecting cable (3-pole)	M 8 - 8 m
5	EEA13591	1	Plug with cable (3-pole)	M 8 - 4 m
5	EEA5453	1	Plug with cable (3-pole)	M 8 - 8 m
5	EEA12282	1	Plug with cable (3-pole)	M 8 - 15 m
6	EEA13640	1	Connecting cable (4-pole)	M 12 - 2 m
6	EEA13641	1	Connecting cable (4-pole)	M 12 - 4 m
6	EEA14112	1	Connecting cable (4-pole)	M 12 - 6 m
6	EEA14060	1	Connecting cable (4-pole)	M 12 - 8.5 m
6	EEA14599	1	Connecting cable (4-pole)	M 12 - 9.5 m
6	EEA13646	1	Connecting cable (4-pole)	M 12 - 2 m (2xCAN-Bus)
6	EEA14578	1	Connecting cable (5-pole)	M 12 - 2.5 m
7	EEA14103	1	Plug with cable (4-pole)	M 12 - 2 m
7	EEA6076	1	Plug with cable (4-pole)	M 12 -5 m
7	EEA5790	1	Plug with cable (4-pole)	M 12 - 8 m
7	EEA9799	1	Plug with cable (4-pole)	M 12 - 15 m
7	EEA14579	1	Plug with cable (5-pole)	M 12 - 0.5 m
7	EEA14580	1	Plug with cable (5-pole)	M 12 - 4 m
7	EEA13445	1	Plug with cable (5-pole)	M 12 -5 m
7	EEA13446	1	Plug with cable (5-pole)	M 12 -10 m
8	EEA12216	1	Plug with cable (4-pole)	M 12 - 3 m 2x2 CAN-Bus
8	EEA11926	1	Plug with cable (4-pole)	M 12 - 5 m 2x2 CAN-Bus
8	EEA13797	1	Plug with cable (4-pole)	M 12 - 7 m 2x2 CAN-Bus
9	EEA2037	1	Angle plug with cable (3-pole)	M 12 - 25 m
9	EEA11661	1	Angle plug with cable (4-pole)	M 12 - 3 m
9	EEA3323	1	Angle plug with cable (4-pole)	M 12 - 5 m
9	EEA3324	1	Angle plug with cable (4-pole)	M 12 - 10 m
10	EZ2837	1	Protection hose (metre goods)	D 6.6/10 mm
10	EZ1293	1	Protection hose (metre goods)	D 9.8/13 mm
10	EZ1266	1	Protection hose (metre goods)	D 12.2/15.7 mm
10	EZ1267	1	Protection hose (metre goods)	D 16.6/21.2 mm
10	EZ1268	1	Protection hose (metre goods)	D 23.2/28.3 mm
10	EZ8598	1	Protection hose (metre goods)	D 19.2/23.9 mm
10	EZ1269	1	Protection hose	D 29/34,5mm
11	EH 822	1	Protection hose	NW 50x500
11	EH 878	1	Protection hose	NW 102x1000
11	EH 620	1	Protection hose	NW 70x1000
11	EH 641	1	Protection hose	NW 102x2000
12	EK 155	1	Cable tie	l=102x2.5
12	EK 165	1	Cable tie	l=215x4.8
13	EZ7063	1	Protection hose (metre goods)	D 5.7/11.5 mm
13	EZ5637	1	Protection hose (metre goods)	D 510/16.2 mm
13	EZ1620	1	Protection hose (metre goods)	D 13.7/21 mm
13	EZ7235	1	Protection hose (metre goods)	D 19.8/28.4 mm
13	EZ7236	1	Protection hose (metre goods)	D 25/34.2 mm

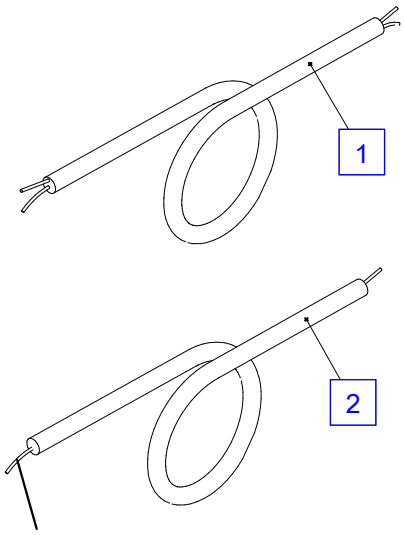

single

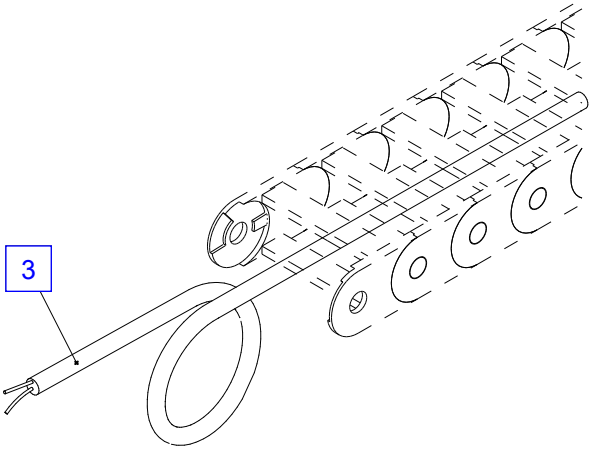

Cable for drag chain (metro goods)

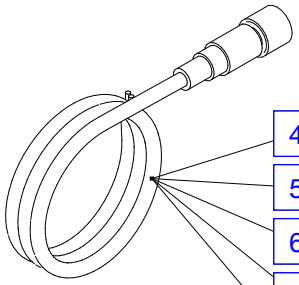

4 Plug M8 - Socket M8
5 Socket M8 - Cable
6 Plug M12 - Socket M12
7 Socket M12 - Cable
8 Plug CAN-Bus

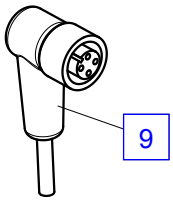

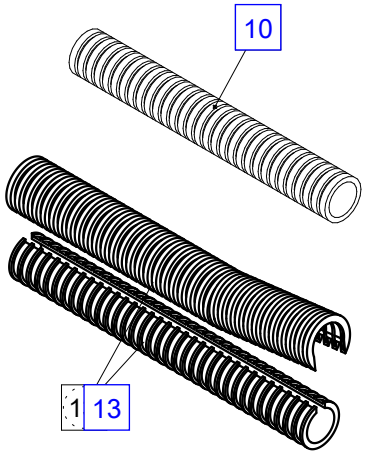

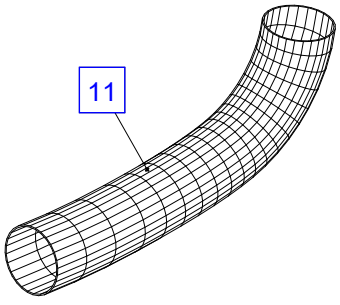

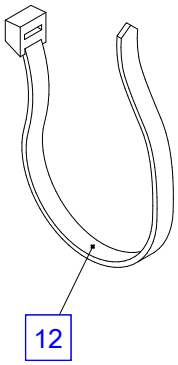

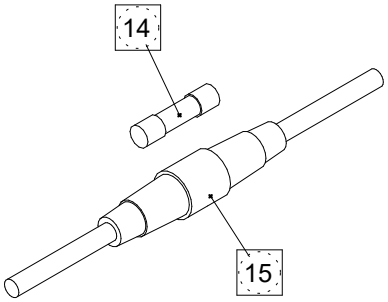

Horn + Lighting

No.	Spare part	Qty.	Description	Dimension
2	EEA6193	1	Horn (Continuous tone)	12/24 VDC (H5)
2	EEA5618	1	Horn (Alternating tone alert signal)	12/24 VDC
2	EEA11541	1	Horn (Continuous tone) (Alternating tone alert signal)	12/24 VDC
3	EEA6194	1	Horn	12/24 VDC (H6)
4	EEA5442	1	Light, orange	3 m
4	EEA5443	1	Light, orange LED	3.65 m
4	EEA5657	1	Light, orange	1 m
4	EEA14372	1	Light, red	8 m
5	EEA13831	1	LED, orange	MIC
6	EEA5502	1	Control cables Light	
7	EEA15937	1	Light, green	M 12
8	EEA17020	1	Adapter cable	MIC - M 12
9	EEA5790	1	Plug with cable (4-pole)	M 12 - 8 m
10	EEA12875	1	Lamp	
11	EEA11854	1	Working light LED	50 Watt 4200 lm
	EEA5044	1	Plug, cpl.	
	EEA14722	1	Plug (2-pole)	
12	EEA14958	1	Working light LED	28 Watt 1800 lm
	EEA5044	1	Plug, cpl.	

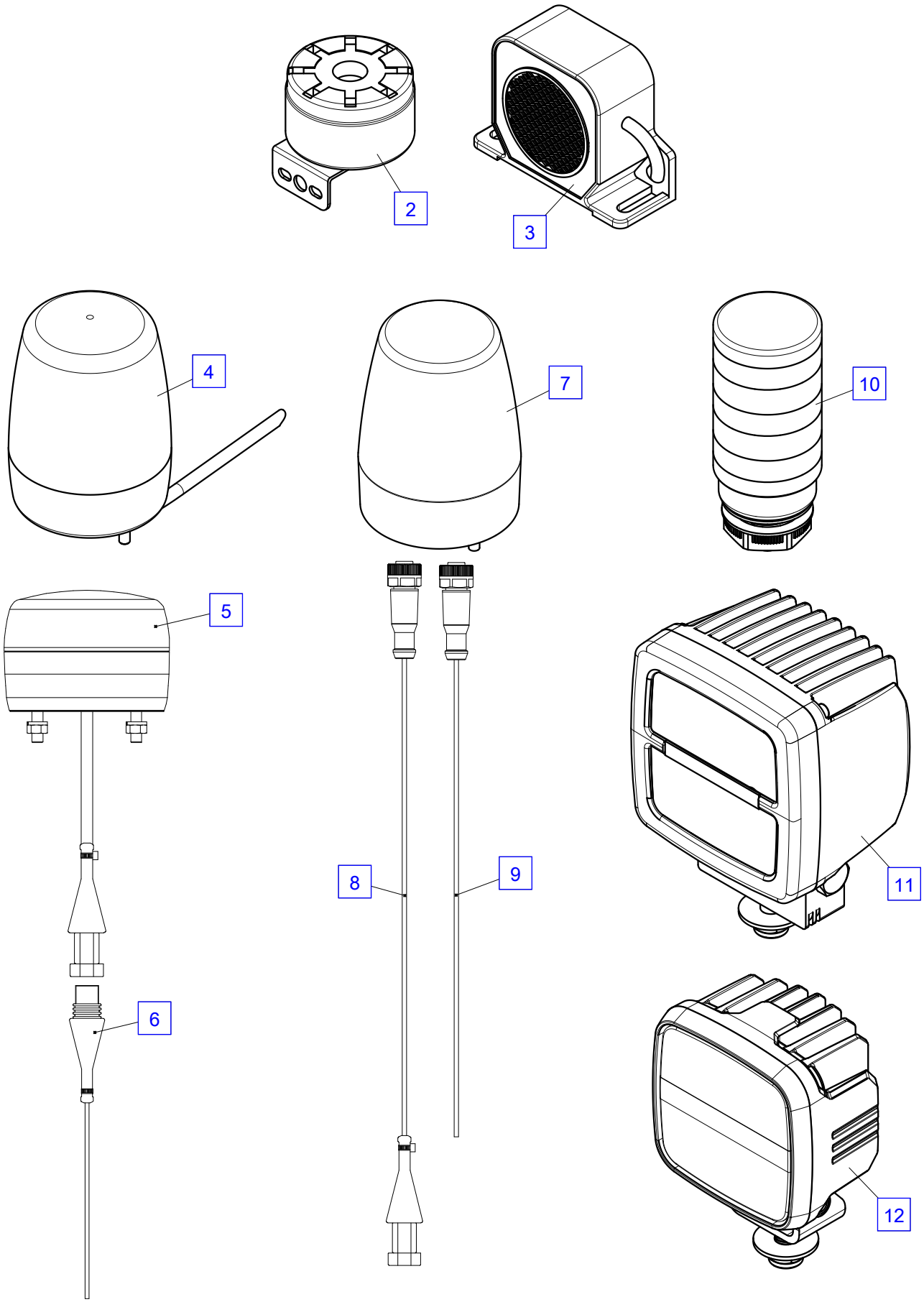
2
3
4
7
10
5
8
9
11
6
12

PALFINGER

0600.00100 # 100679684

Connector kit

No.	Spare part	Qty.	Description	Dimension
1	EEA15734	1	Connector kit AT (2-pole) black	
2	EEA16549	1	Connector kit AT (2-pole) Pin	
3	EEA16424	1	Connector kit AT (2-pole) Socket	
4	EEA14516	1	Connector kit AT (4-pole) black	
5	EEA16550	1	Connector kit AT (4-pole) Pin	
6	EEA16426	1	Connector kit AT (4-pole) Socket	
7	EEA14517	1	Connector kit AT (6-pole) black	
8	EEA16551	1	Connector kit AT (6-pole) Pin	
9	EEA16427	1	Connector kit AT (6-pole) Socket	
10	EEA20392	1	Connector kit AT (3-pole) black	
11	YE81388	1	Connector kit AT (3-pole) Socket	
12	YE81389	1	Connector kit AT (3-pole) Pin	
13	EKD 091	1	Set of universal crimping pliers	
13	EKD 095	1	Set of universal crimping contacts	

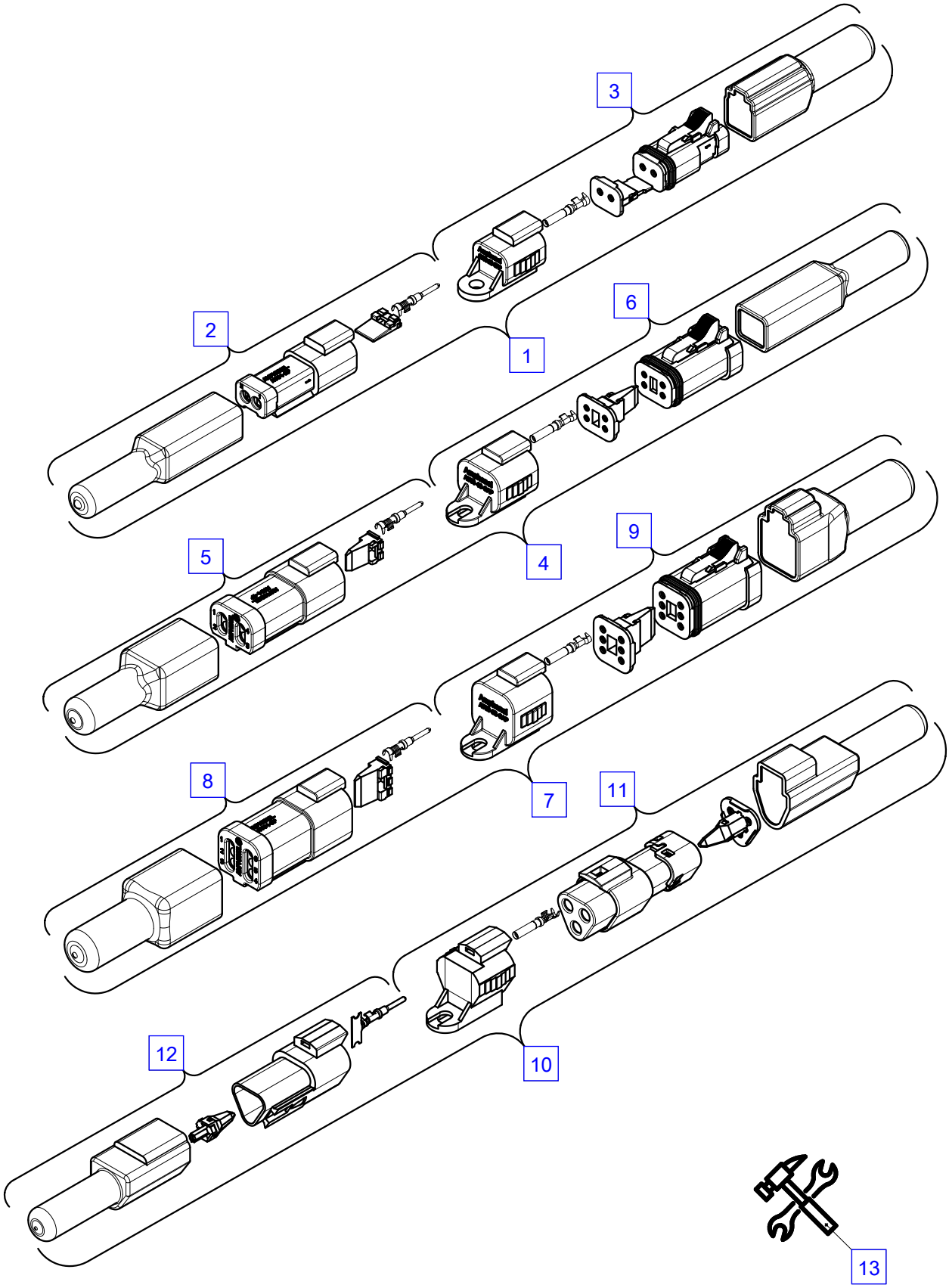
3
2
1
6
5
4
9
8
7
11
12
10
13

Connector kit

No.	Spare part	Qty.	Description	Dimension
1	EEA14984	1	Connector kit ATM (8-pole) grey	
2	EEA16556	1	Connector kit ATM (8-pole) Pin	
3	EEA16432	1	Connector kit ATM (8-pole) Socket	
4	EEA16631	1	Connector kit ATM (12-pole) Pin	
5	EEA16632	1	Connector kit ATM (12-pole) Socket	
6	EEA15735	1	Connector kit AT (8-pole) black	
7	EEA16552	1	Connector kit AT (8-pole) Pin	
8	EEA16428	1	Connector kit AT (8-pole) Socket	
9	EEA15736	1	Connector kit AT (12-pole) black	
9	EEA16209	1	Connector kit AT (12-pole) green	
9	EEA16210	1	Connector kit AT (12-pole) brown	
10	EEA16553	1	Connector kit AT (12-pole) Pin black	
10	EEA16554	1	Connector kit AT (12-pole) Pin green	
10	EEA16555	1	Connector kit AT (12-pole) Pin brown	
11	EEA16429	1	Connector kit AT (12-pole) Socket black	
11	EEA16430	1	Connector kit AT (12-pole) Socket green	
11	EEA16431	1	Connector kit AT (12-pole) Socket brown	
12	EKD 091	1	Set of universal crimping pliers	
12	EKD 095	1	Set of universal crimping contacts	

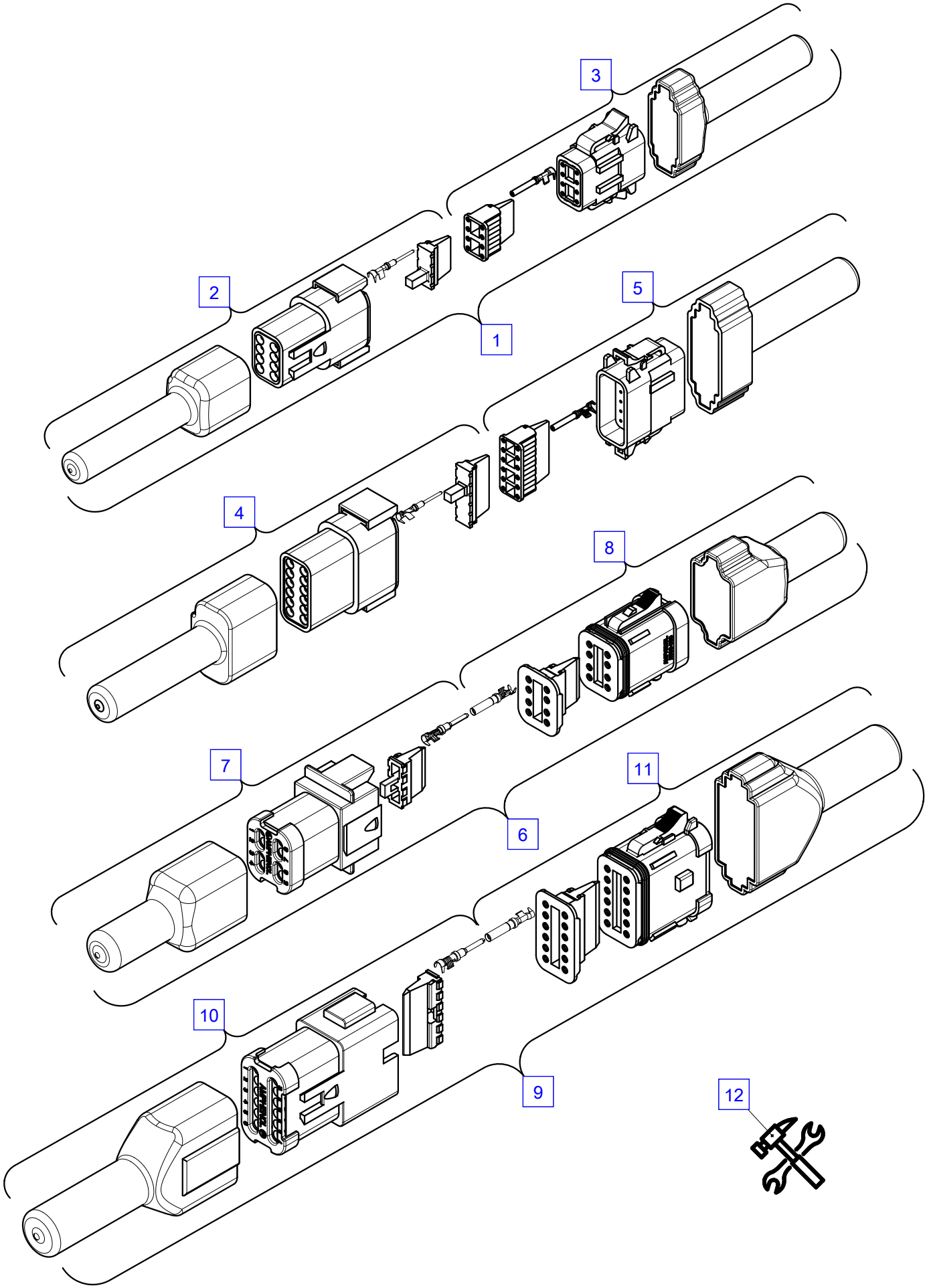
3
2
1
5
4
8
7
6
11
10
9
12

PALFINGER

0600.00103 # 100679684

Plug Molex

No.	Spare part	Qty.	Description	Dimension
1	EEA12509	1	Plug, blue	
1	EEA12510	1	Plug, grey	
2	EEA12514	1	Cover	
3	EEA12515	1	Seal plug	
4	EEA12511	1	Contact	0,35 mm²
4	EEA12512	1	Contact	0,5 - 0,75 mm²
4	EEA12520	1	Contact	1 mm²
5	EKD 091	1	Set of universal crimping pliers	
5	EKD 095	1	Set of universal crimping contacts	

Plug Molex

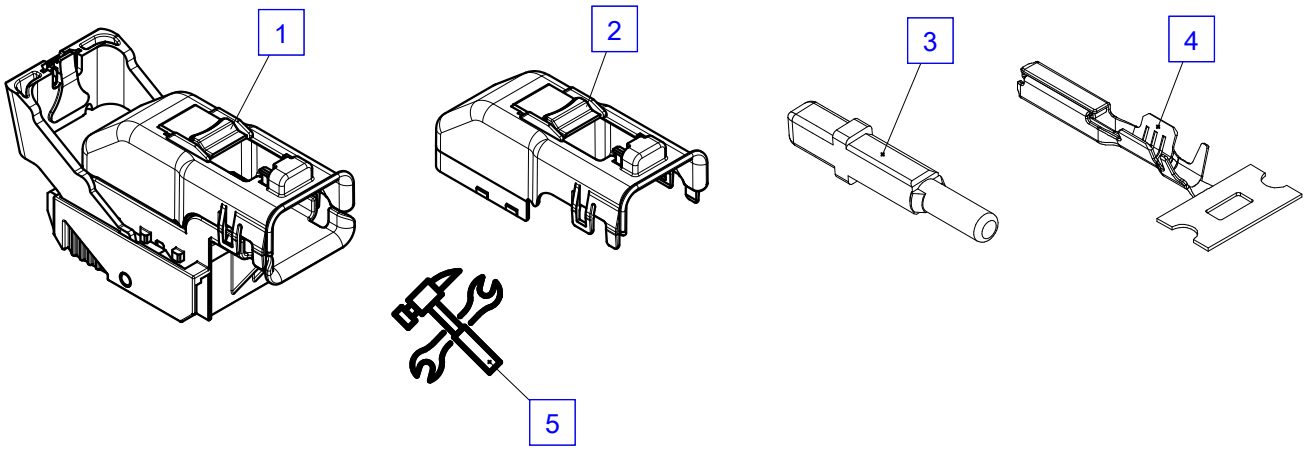

Working light

No.	Spare part	Qty.	Description	Dimension
1	HXE 897	1	Bearer	
2	EK 003	2	Washer	D8.4 ISO7089
3	ES 374	2	Screw	M 8x12 ISO4762- 8.8
5	EEA14958	1	Working light LED	28 Watt 1800 lm
	EEA5044	1	Plug, cpl.	

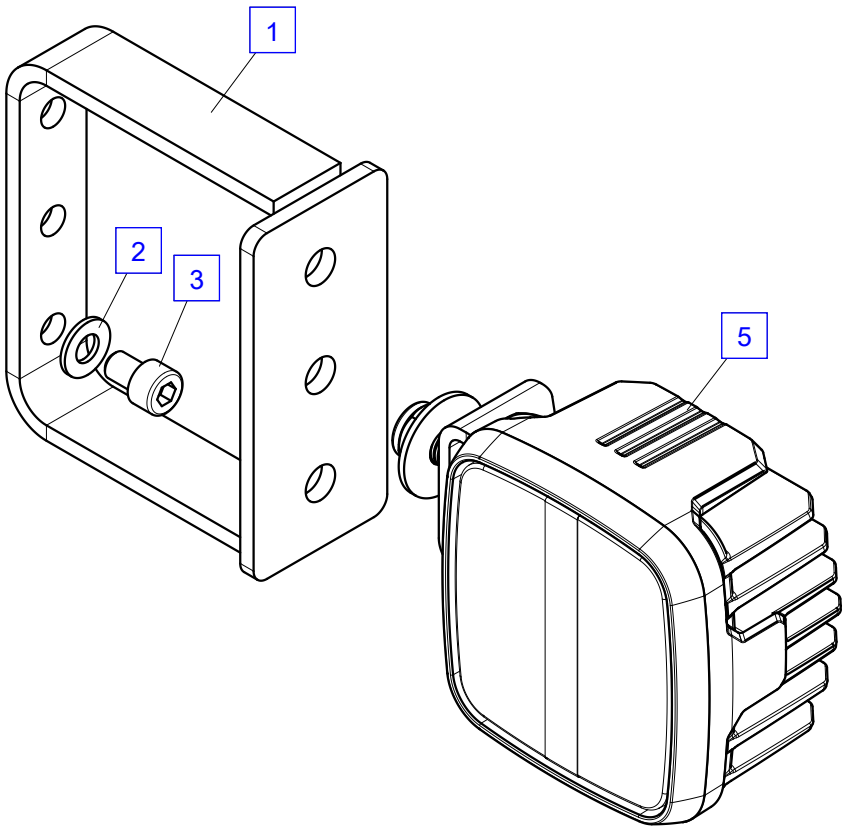
1
2
3
5